SHERCO

WORKSHOP MANUAL

250 SE/R
300 SE/R

CONTENTS

ENGLISH

FOREWORD

This manual is primarily intended for qualified mechanics working in a properly equipped workshop.

A solid knowledge of mechanics and the specific SHERCO tools for the 250 SE-R and 300 SE-R engines are required to perform the various operations.

This workshop manual complements the SHERCO 250 SE-R and 300 SE-R user manual.

ENGINE TOOL LIST

250 SE-R and 300 SE-R

Tool reference	Designation
5749	Clutch block
4753	Ignition block
2067	Swing-arm pin tool
R467	Right crankcase primary shaft bearing tool
R465	Secondary shaft bearing tool
5397	Gearbox output shaft bearing tool
R446	Gearbox output spi tool
5398	Barrel selection bearing tool
5399	Left crankcase crankshaft bearing tool
R469	Right crankcase crankshaft bearing tool
5400	Clutch side crankshaft spi tool
5401	Ignition side crankshaft spi tool
5402	HK0808 needle cage tool (water pump, starter drive double pinion, starter drive)
1968	Water pump spi seal tool
1821	Engine support
5206	Primary pinion block tool
2073	Spring block (pin selection)
R462	Magnetic flywheel puller
R464	Crankshaft ring extractor
R453	Selector axis bearing assembly tool
R444	Selector spi seal tool
6267	Diagnostic Key less tool
4967	Diagnostic briefcase

TECHNICAL SPECIFICATIONS

ENGINE

Type	Single cylinder 2 stroke liquid cooling	
Capacity	249.32 CC	293.14 CC
Bore/Stroke	66.4/72 mm	72/72 mm
Petrol	Unleaded with an octane rating of at least 98 mixed with 2-stroke oil (2 %)	
Cooling	Liquid with forced circulation	
Ignition system	Synerject electronic ignition	
Spark plug	NGK BR7ES/DENSO W22ESRU	
Distance between spark plug electrodes	0.7 mm	
Piston	Cast aluminium	
Engine oil	750 ml SAE 10W40	
Primary transmission	27 : 75	
Gearbox :	66 speeds	
1st	14 : 32	
2nd	15 : 26	
3rd	19 : 27	
4th	21 : 24	
5th	23 : 22	
	25 : 21	
Final transmission	14 X 49	
Clutch	Oil bathed multi disks, hydraulic control	
Starter	Electric starter	
Battery	12V 4Ah	
Alternator	220W	

CARBURETTOR

	250	300
Carburettor type	KEIHIN PWK 36S AG	KEIHIN PWK 36S AG
Needle position	3rd position from the top	3rd position from the top
Jet needle	N1EG (N84K)	N8RE (N84K)
Main jet	KEA 165 (KEA 115)	KEA 172 (KEA 115)
Idle jet	KEP 42 (KEA38)	KEP 42 (KEA 38)
Choke jet	85 (50)	85 (50)
Air regulating screw opening	1T 1/4	1T 1/2
Valve spacing	N°5.5	N°7

CYCLE PART

Rahmen	Halbperimetrisch aus CrMo-Stahl mit hinterem Bügel aus Aluminium
Fork	(Racing) WP suspension USD Ø48 mm (Factory) WP suspension Xplor
Rear suspension	WP suspension with separate cylinder, aluminium swing arm
Front/rear stroke	300/330 mm
Front brake	Ø 260 mm disc
Rear brake	Ø 220 mm disc
Disc brakes	Wear limit : 2.7 mm front and 3.6 mm rear
Front tyre	90/90-21”
Rear tyre	140/80-18”
Off-road pressure front/rear	0.9 bar
Fuel tank capacity	10.4 l including 1 litre reserve
Steering column angle	27.3°
Wheelbase	1480 mm
Weight	105 kg
Gewicht	105 kg

FACTORY SETTINGS

FORK

FACTORY SETTINGS - WP FORK USD SUSPENSION Ø48 MM		
Compression	Comfort	20 clicks back
	Standard	13 clicks back
	Sport	8 clicks back
Expansion	Comfort	18 clicks back
	Standard	13 clicks back
	Sport	10 clicks back
Pre-tension	Comfort	4 turns
	Standard	6 turns
	Sport	8 turns
Spring stiffness	Driver weight: 65-75 kg	4.0N/mm
	Driver weight: 75-85 kg	4.2N/mm (factory)
	Driver weight: 85-95 kg	4.4N/mm
Oil type	SAE 4	
Measured oil level (compressed and spring-less fork) from the top of the upper tube	110 mm	

FACTORY SETTINGS - WP FORK XPLOR SUSPENSION		
Compression	Comfort	18 clicks back
	Standard	15 clicks back
	Sport	12 clicks back
Expansion	Comfort	18 clicks back
	Standard	15 clicks back
	Sport	12 clicks back
Pre-tension	Comfort	+ 0
	Standard	+ 0
	Sport	+ 6
Spring stiffness	Driver weight: 65-75 kg	4.2 N/mm
	Driver weight: 75-85 kg	4.4 N/mm (factory)
	Driver weight: 85-95 kg	4.6 N/mm
Oil type	SAE 4	
Quantity of oil	606 ml	
Oil level height from the top of the tube	100 mm (Min. 90 – Max. 120 mm)	
Spring length with pre-tension spacer	474 mm	

SHOCK ABSORBER

FACTORY SETTINGS - WP SUSPENSION SHOCK ABSORBER		
Low speed compression	Comfort	20 clicks back
	Standard	15 clicks back
	Sport	12 clicks back
High speed compression	Comfort	2.5 turns back
	Standard	2 turns back
	Sport	1.5 turns back
Expansion	Comfort	15 clicks back
	Standard	13 clicks back
	Sport	11 clicks back
Spring stiffness	Driver weight: 65-75 kg	48N/mm
	Driver weight: 75-85 kg	51N/mm (factory)
	Driver weight: 85-95 kg	54N/mm

OPERATIONS REQUIRING REMOVAL OF THE ENGINE OR NOT

	Operation requiring removal of the engine	Operation not requiring the removal of the engine
Crankshaft (including connecting rod kit)	•	
Complete gearbox	•	
Crankshaft bearing	•	
Gearbox bearing	•	
Piston		•
Cylinder		•
Cylinder head		•
Ignition		•
Starter pinions		•
Complete clutch		•
Water pump		•
Gear selection assembly		•

REMOVING THE ENGINE

WARNING

To remove the engine, you must remove the swing arm's pivot bolt to detach the rear wheel/swing arm assembly. Secure the chassis with a jack to prevent the motorcycle from overturning.

- Drain (see user manual).
- Engine oil.
- Coolant.
- Remove the seat.
- Disconnect the battery.
- Remove the tank with its inlets.
- Disconnect the complete wiring harness connected to the engine (starter terminal, interference suppressor, actuator).
- Remove the exhaust (see user manual).
- Remove the carburettor.
- Remove the secondary transmission chain (quick coupler).
- Remove the chain guard.
- Remove the clutch slave cylinder.

WARNING

When the clutch slave cylinder is removed, the piston is no longer held in place. Secure the piston with a plastic collar.

- Remove the water hoses connected to the engine.
- Remove the left radiator.
- Loosen all the engine screws.
- Loosen the swing-arm pin.
- Remove the cylinder head-frame lugs and its electric motor.
- Remove the engine pins.
- Remove the swing-arm pin.
- Disconnect the valve cables from the pulley.
- Remove the engine.

REASSEMBLING THE ENGINE IN THE FRAME

To reassemble, follow the disassembly procedure in reverse while respecting the tightening torques of screws and nuts:

Engine screw: 60Nm.

Swivel-arm screw: 100 Nm.

Clutch slave cylinder screw: 10 Nm.

Head-frame screw: 23 Nm.

Refer to the 250 SE-R/300 SE-R spare parts catalogue for exploded views.

DRAINING THE GEARBOX

- Remove the drain plugs (1) and (2), let the oil drain.

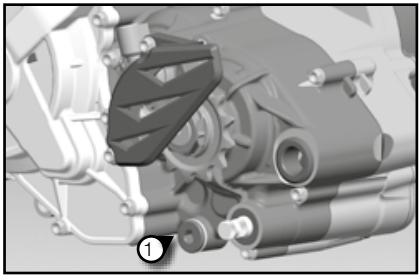

REMOVING THE PINION AND SELECTOR

- Unfold the safety washer's tab (3) using a punch.
- Remove the gearbox output pinion (4).
- Remove the screw (5) and extract the selector.
- Remove the clutch control rod.

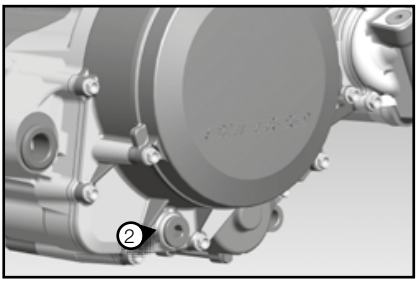

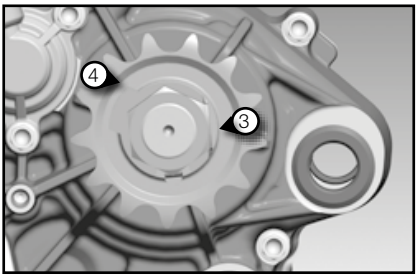

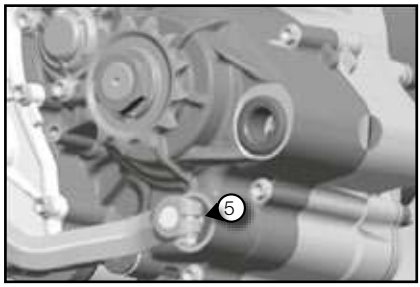

REMOVING THE CYLINDER HEAD, CYLINDER, AND PISTON

- Remove the shoulder bolts (1), the copper washers, remove the cylinder head and the two o-rings.

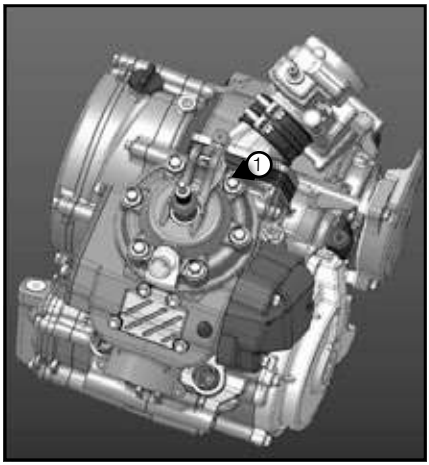

- Remove the exhaust valve actuator (2).

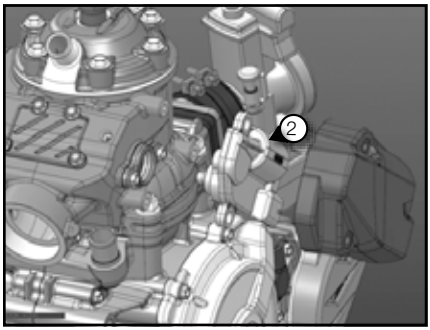

- Remove the exhaust chamber cover (3).
- Remove the 4 screws (4) on the base of the cylinder and remove it.
- Mask the cover.

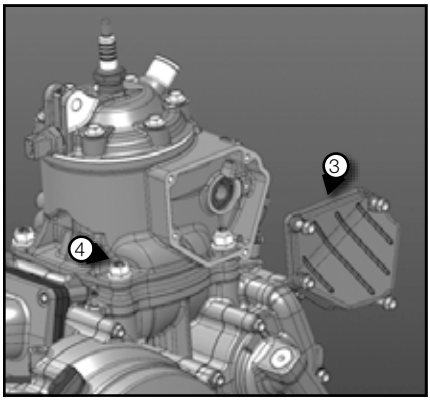

- Remove the piston pin clips.
- Remove the piston pin.
- Remove the piston and extract the needle bearing from the connecting rod eye.
- Remove the header gasket.

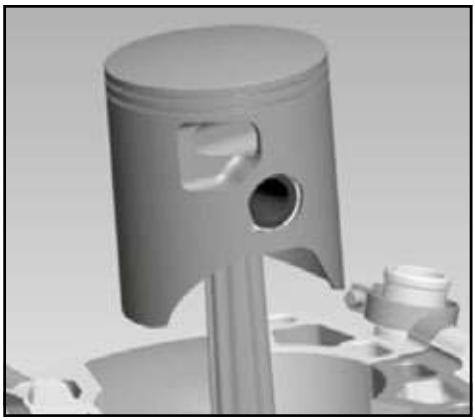

REMOVING THE CLUTCH HOUSING

- Remove the screws and the water pump cover. Remove the gasket.

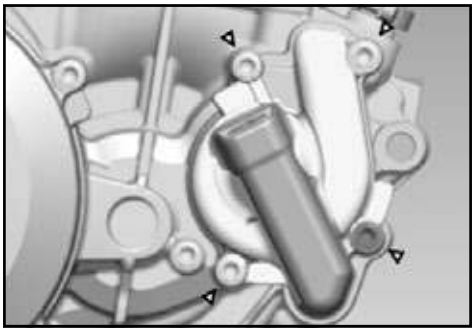

- Remove the screws and extract the clutch housing. Remove the gasket.

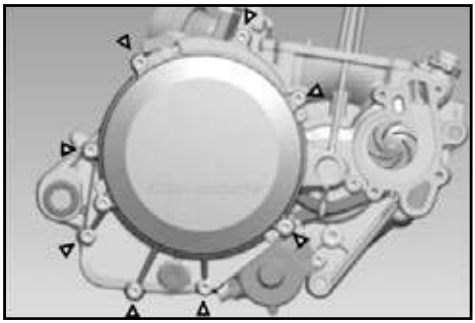

REMOVING THE PRESSURE PLATE AND DISCS

- Loosen the pressure plate screws (1).
- Remove the screws, springs and spring cups.

- Remove the pressure plate and discs from the housing.
- Remove the support piece (1) on the primary shaft.

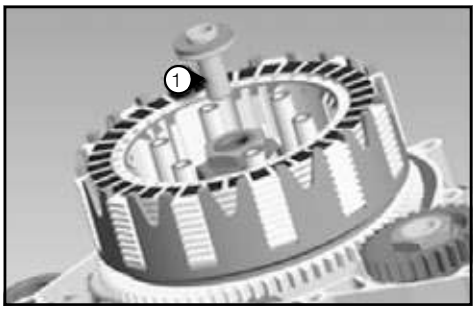

REMOVE THE ELECTRIC STARTER

- Remove the 2 screws (2).

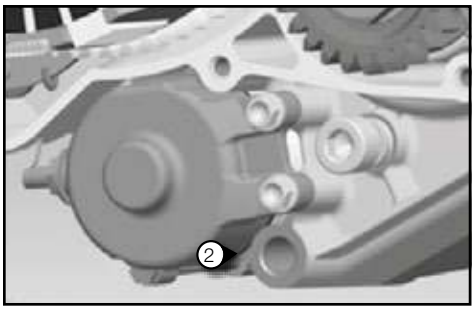

REMOVING THE PRIMARY TRANSMISSION

- Lock the pinion at the end of the crankshaft with the 5206 tool (3).
- Unscrew the primary transmission nut (4) and then remove it with its conical washer.

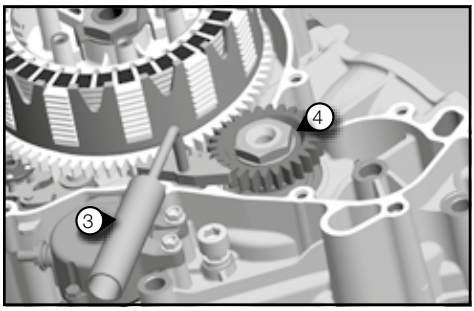

- Open the clutch boss lock washer (5).
- Apply the 5749 tool (6) which is designed to hold the boss, then loosen the nut.
- Remove the tool.
- Remove the boss, the crenellated washer, the housing with the 2 needle cages.

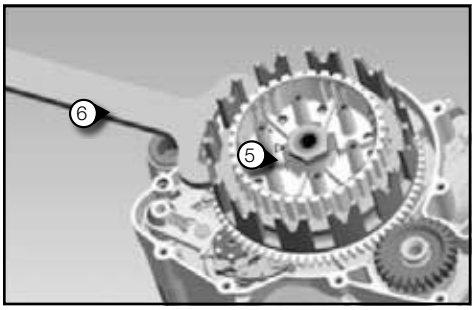

- Removing the primary transmission pinion and the spacer (1) at the end of the crankshaft.

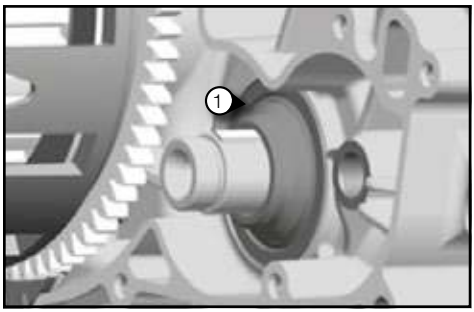

PAY ATTENTION

To the pin and the o-ring.
The primary transmission pinion and the clutch housing ring are paired, which is why they can not be changed separately. Always replace them together.

REMOVING THE LOCKING MECHANISM

- Push back the scorpion with a screwdriver so that it is no longer in contact with the star selector, then remove the selection shaft.

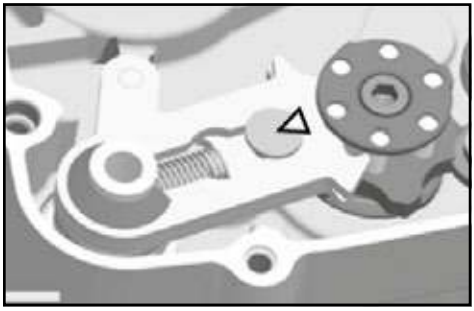

WARNING

Pay attention to the washer which remains at the bottom of the housing.

- Loosen the Allen screw (2) and remove the star selector (3).

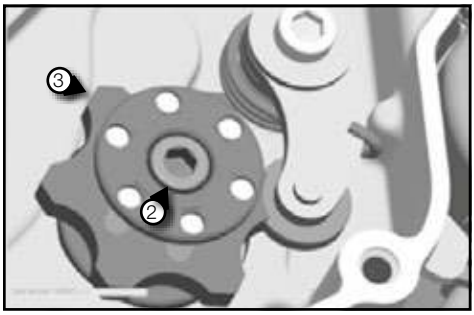

PAY ATTENTION

To the star selector's indexing pin. the locking lever should only be extracted if the housing is changed.

- Then loosen the screw (4) and remove the lever with its spring and spacer.

REMOVING THE IGNITION HOUSING

- Remove the screws and extract the ignition housing with its gasket.

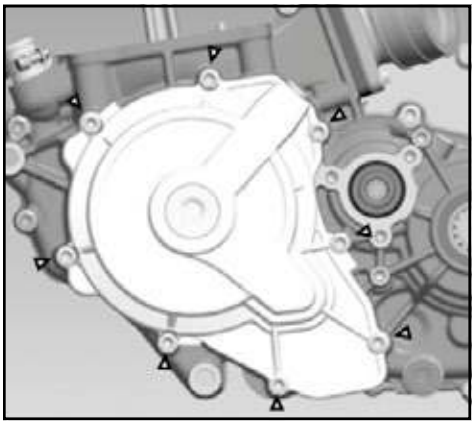

REMOVING THE TORQUE LIMITER AND THE STARTER DRIVE

- Remove the 3 shoulder screws (1).
- Remove the torque limiter lug (2).
- Remove the starter drive (3).
- Remove the torque limiter (4).

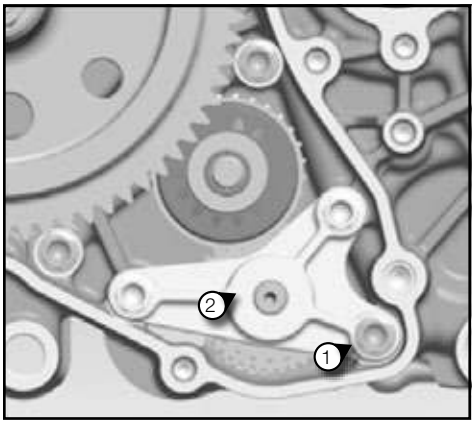

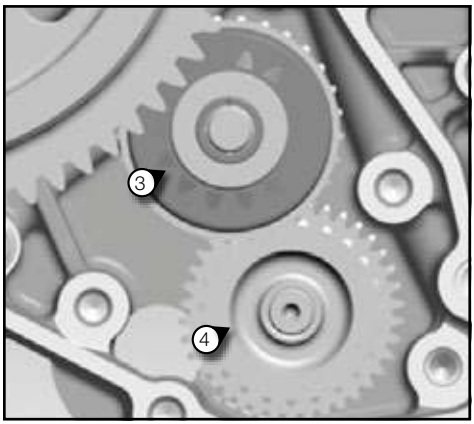

REMOVING THE IGNITION

- Hold the flywheel with the 4753 tool (1) and unscrew the shoulder nut.
- Position the R462 puller (2) and extract the magnetic flywheel (3).

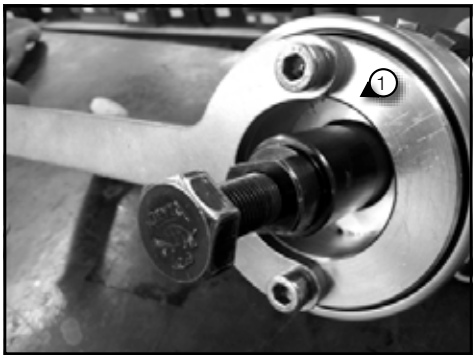

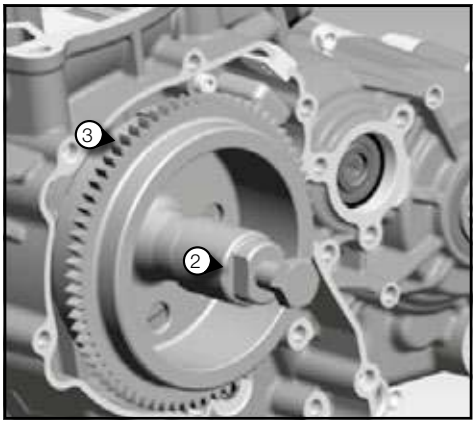

INTAKE PIPE AND VALVE BOX

- Remove the 4 THEP screws (4).
- Remove the pipe, the valve box, and their respective gasket.

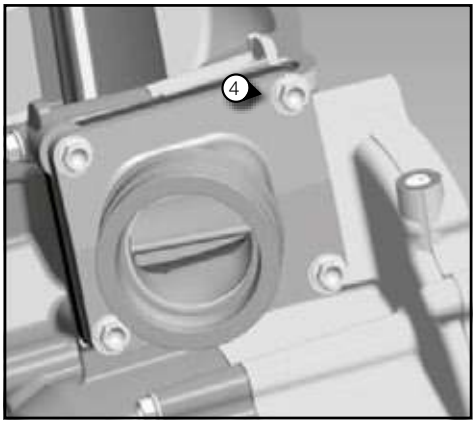

- Separate the half crankcases.
- Tilt the engine so that the ignition side is facing you.
- Remove all the fixing screws.
- Remove the seal ring and its o-ring from the gearbox output shaft.
- Lift the left half crankcase by lightly tapping the gearbox output shaft with a plastic mallet to separate it from the other half.
- Remove the half crankcase and the central gasket.

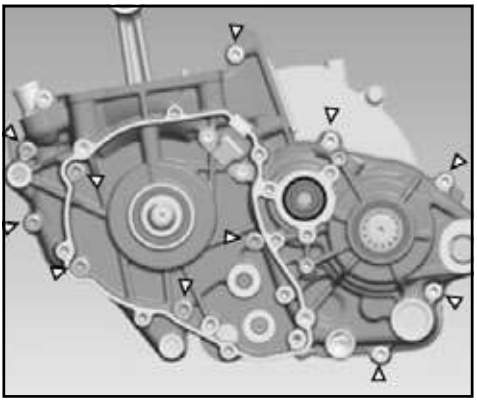

WARNING

Prising a screwdriver or other tool between the half housings to separate them should be avoided as much as possible. You may damage the gasket surfaces.

WARNING

Pay attention to the gearbox shafts' set rings. They can remain stuck inside the housing.

REMOVING THE GEAR SELECTION

- Remove the gearbox lubrication tube (1).
- Remove the set ring from the primary shaft (2).
- Remove the two pins from the shift forks (3) and push the shift forks to the side to release them from the cylinder.
- Remove the selection cylinder from its bearing.
- Remove the shift forks.
- Remove the primary and secondary shaft from their bearing together.

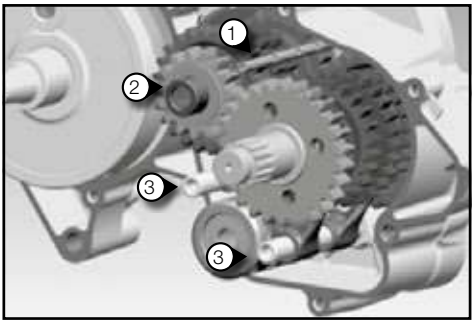

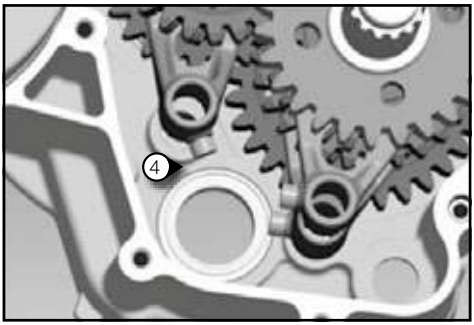

WARNING

When dismantling, take care not to lose the small rollers (4) on the fork studs. identify which is the corresponding fork for each roller to facilitate reassembly.

REMOVING THE CONNECTING ROD ASSEMBLY

- Remove the connecting rod assembly from its bearing (if necessary by tapping lightly with a plastic mallet on the end of the crankshaft).
- Clean all parts and check for wear. Replace them if necessary.

WARNING

When completely dismantling the engine, it is best to replace all gaskets, spi seals, o-rings and even bearings.

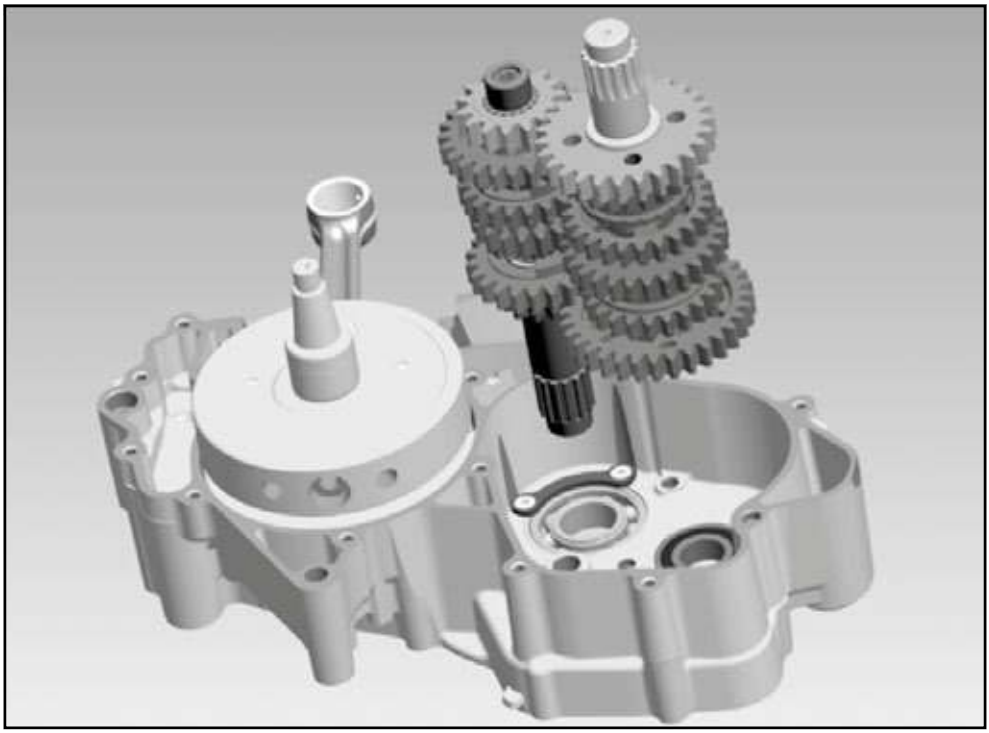

CONNECTING ROD ASSEMBLY

- If the roller bearing has been changed, the inner ring which sits against the balance weight must also be changed.
- Heat the R464 tool to approximately 150°C, immediately thread it onto the inner ring. Place the tool correctly on the ring to encourage heat transfer, then extract the ring.
- To mount the new ring, heat the tool to approximately 150°C. Insert the new ring and thread it immediately onto the connecting rod assembly.

BALANCE WEIGHTS, CHECKING THE EXTERNAL DIMENSIONS

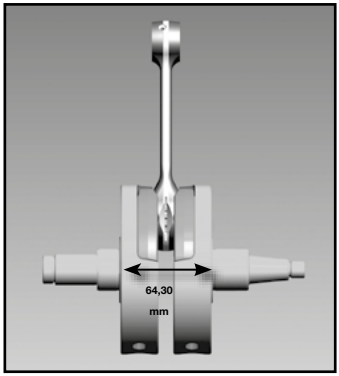

- Use a calliper to measure the external distance of the balance weights.
  External value: 64.3 +0/-0.2 mm.

RADIAL PLAY OF THE CONNECTING ROD HEAD

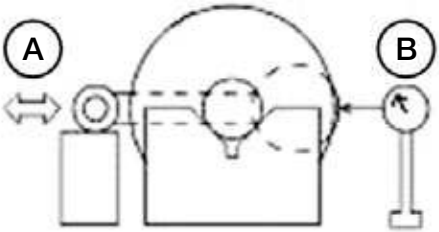

- Position the crankshaft on the V and place a dial gauge (A) against the connecting rod head.
- Push (B) the connecting rod head towards the gauge, then in the opposite direction. The difference between these two measurements corresponds to the radial play.
  Radial play of the connecting rod head:
  Standard: 0.015 mm – 0.025 mm

Tolerable limit: 0.06 mm

If the radial play is greater than the tolerated limit, the crankshaft must be replaced.

LATERAL PLAY OF THE CONNECTING ROD HEAD

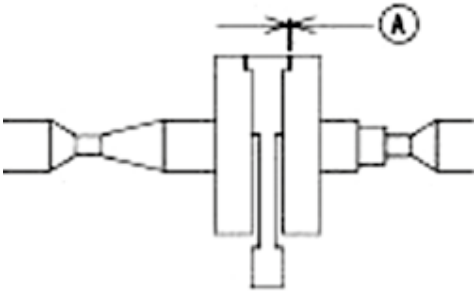

- Measure the lateral play of the connecting rod head (A).
  Lateral play of the connecting rod head:
  Standard: 0.8 mm - 1 mm
  Tolerable limit: 1.25 mm

If the play is greater than the tolerated limit, the crankshaft must be replaced.

CHECKING THE CRANKSHAFT'S RUN OUT

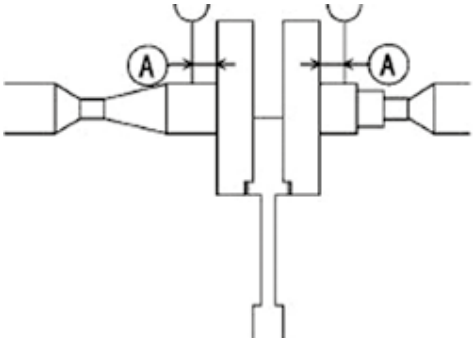

- Place the crankshaft on an alignment device or V-blocks, and position a comparator as shown in the picture.
- Slowly turn the crankshaft. The maximum difference between the measurements corresponds to the misalignment of the crankshaft.
  Run out:
  Standard: 0.03 mm maxi
  Tolerated limit: 0.05 mm

If the alignment is not correct, replace the crankshaft or align it so that it falls within the tolerated limits.

PISTON

- If you want to install a used piston, check the following points:
- Skirt: look for any marks (tightening). Light marks can be removed with a soft stone.
- Segment grooves: Segments must not get stuck in their groove. These can be cleaned with an old segment or emery cloth (400 grit).
- Segment retainers must be tightly held and must not be worn.
- Segments: Check the condition and gap spacing.

GAP SPACING

- Thread the segment into the cylinder and position it with the piston (about 10 mm from the top edge of the cylinder).
- Using a spacer, the gap spacing is measured.

Gap spacing: Standard 0.35-0.45 mm, Max 0.65.

WARNING

If the gap is greater than indicated, check the condition of the cylinder and the piston. If their dimensions are within the tolerance range, replace the segment.

PISTON PIN CHECK

- Piston pin diameter
  Standard: 17.995 -17.998 mm
  Tolerable limit: 17.962 mm
- Piston pin hole diameter
  Standard: 18.006 - 18.010 mm
  Tolerated limit: 18.08 mm

CHECKING THE WEAR CONDITION OF THE CYLINDER

- To detect cylinder wear, the bore is measured with a bore comparator at about 10 mm from the top edge of the cylinder. Measure from both directions to identify any potential ovality.

Cylinder	Cylinder bore	Piston
250	66.410-66.420 66.421 - 66.430	A B
300	72.010-72.020 72.021 - 72.030	A B

STANDARD CYLINDER REPLACEMENT

WARNING

If the diameter of the cylinder is greater than 66.430 mm for example, the interior lining most be renewed (nikasil) or the cylinder replaced.
Before renewing the cylinder, dismantle all the exhaust valve components.
The piston size is indicated on the top of the piston, there is only one size of cylinder.

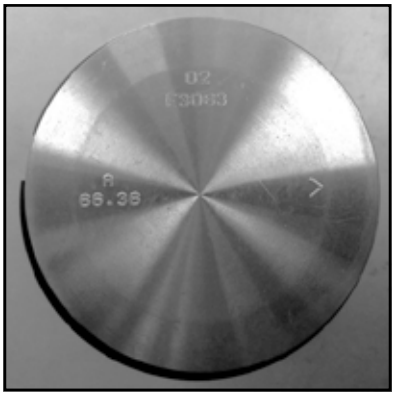

DISASSEMBLING THE EXHAUST VALVE SYSTEM

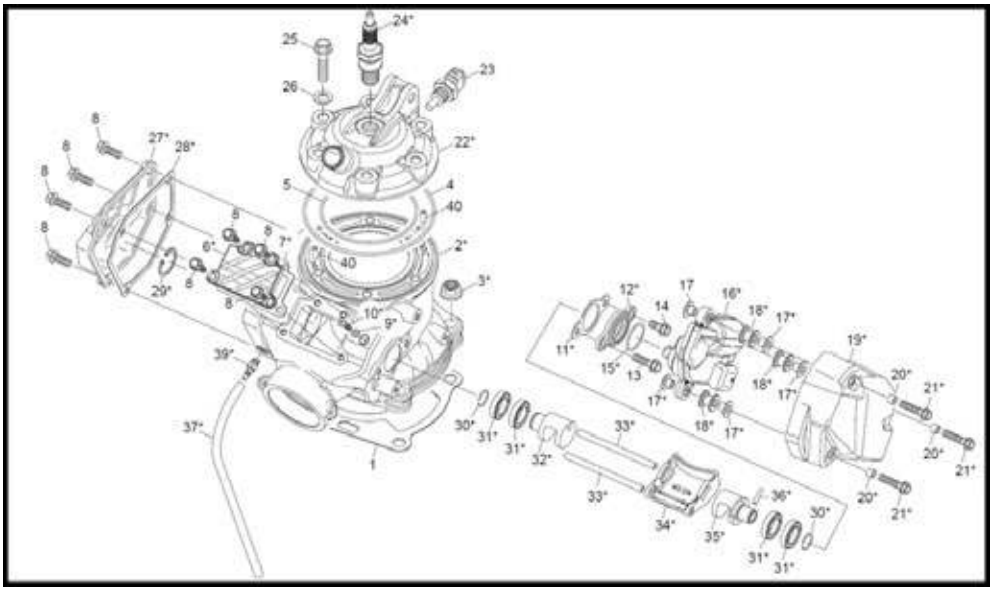

- Remove the valve cover [6].
- Remove the actuator support [12].
- Remove the stop screw [10] with the copper sealing washer [9].
- Remove the bore circlip with circlip pliers [29].
- Remove the valve mechanism assembly.

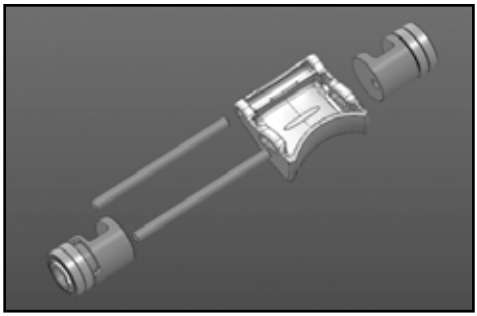

FUNCTIONAL CHECK

- Clean and descale all the dismantled parts.
- Check with your fingernail that there are no notches on the exhaust barrels [32] and [35], visually check their seating in the cylinder.
- Inspect the axis of rotation of the exhaust valve [33], replace it if there are notches that you can feel with your fingernail.
- Test the play in the exhaust barrel bearings [31] and check that there is no hard point over 360°.
- Systematically change all the gaskets on the top of the engine [28, 7, 26, 4, 5, 11, 15, 9] before reassembling.
- To reassemble, follow the disassembly procedure in reverse, paying attention to the following points.

WARNING

When reassembling the actuator support [12], be careful that the 2 screws are not the same length.

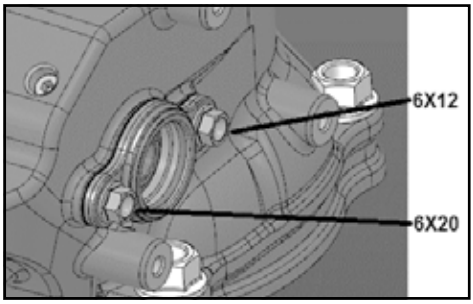

- After reassembly, check the lateral play of the central valve minimum 0.1 mm.

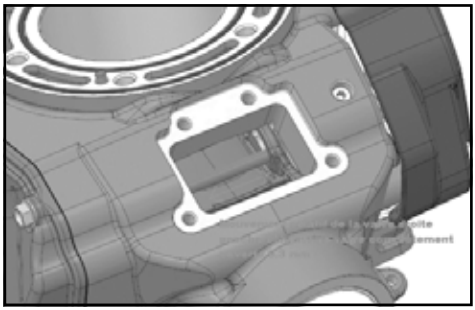

- Operate the system with rotational movements.

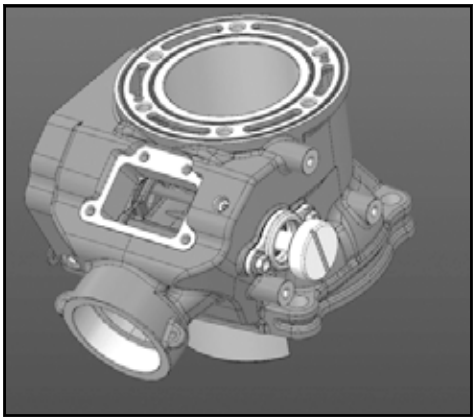

- Check that the pin stops against the valve (kidney-shaped contact) when it is 100 % open.

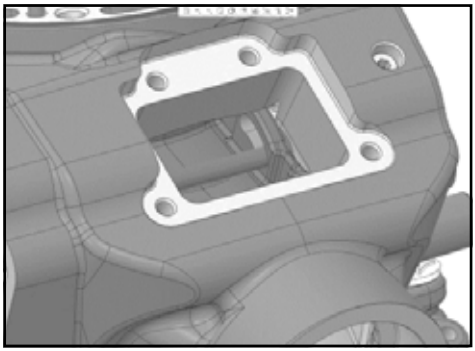

- Check that the pin stops against the valve (kidney-shaped contact) when it is 100 % closed.

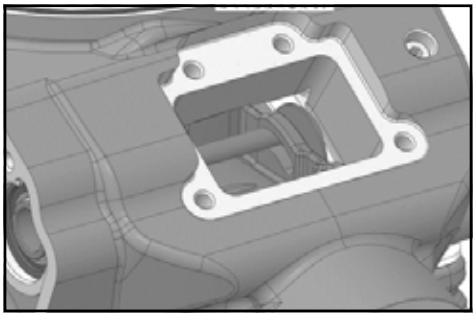

WARNING

In the following cases the valve must not reach the stopper during opening and closing.

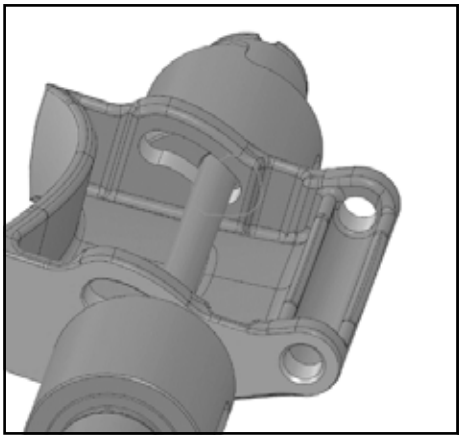

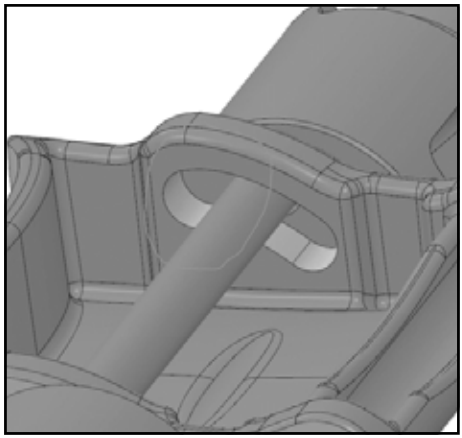

- Check the lateral play of all the mechanics minimum 0.1 mm.

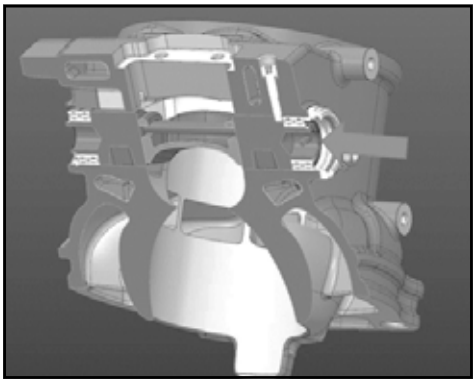

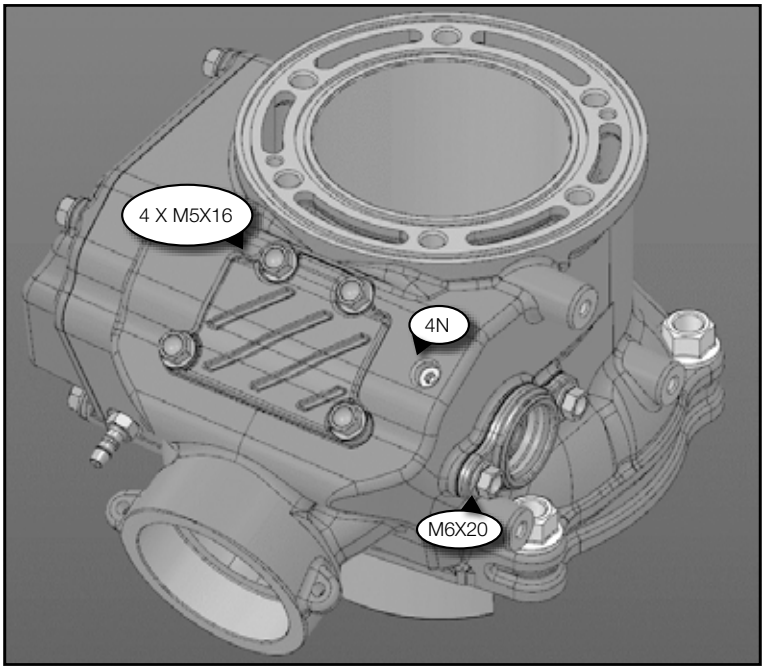
4 X M5X16
4N
M6X20

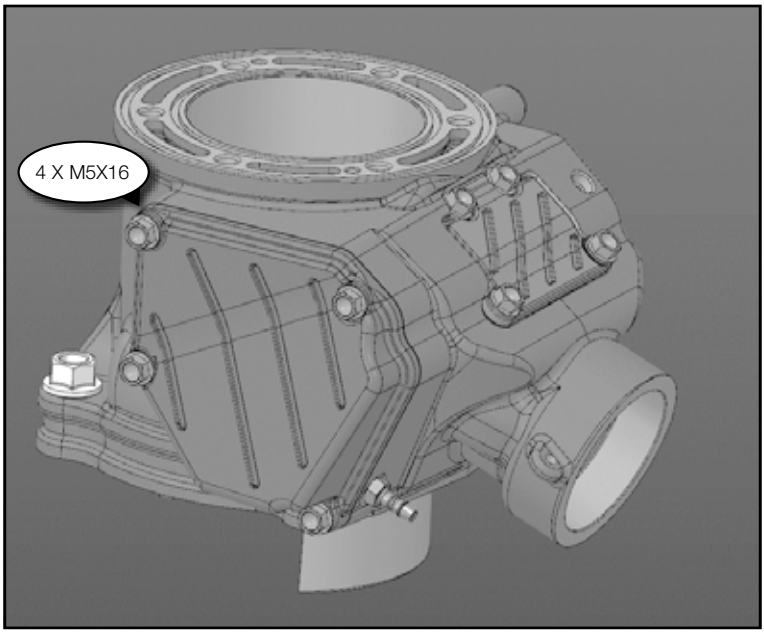
4 X M5X16

VALVE STOP LEARNING AFTER CYLINDER REASSEMBLYT

WARNING

After any maintenance operation on the internal parts of the cylinder and/or after changing the cylinder, the sherco diagnostic tool's machine learning application must be run (see p63 diagnostic tool chapter).

VALVE BOX, INTAKE PIPE SLEEVE

- Over time the carbon tabs gradually lose their elasticity, which results in a loss of power.
- Replace the worn or damaged box.
- Check the condition of the intake sleeve, especially if it is not cracked.

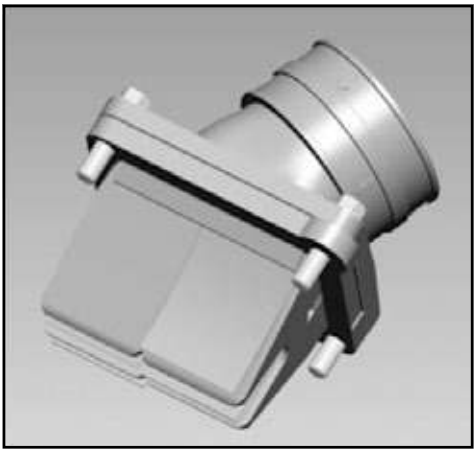

CLUTCH

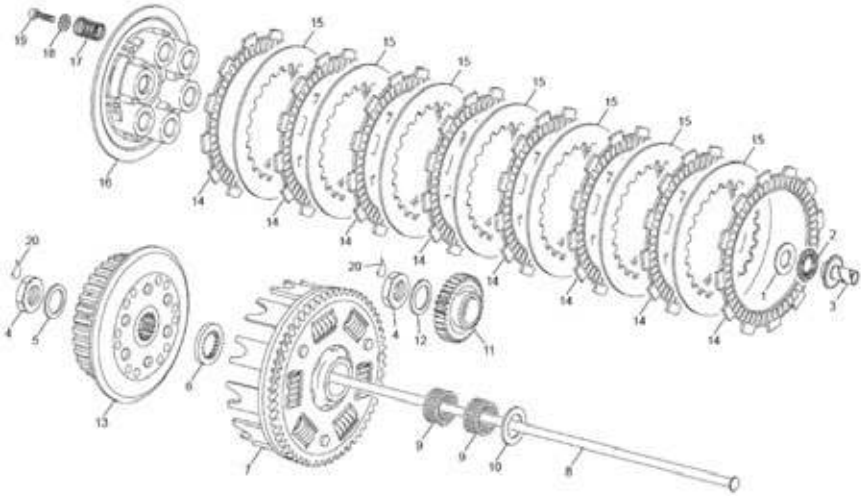

- Stopper [3] check wear.
- Rod [8] check for wear. Minimum length : 194.7 mm.
- Springs [17] Check their length. Minimum spring length 45 mm. Replace the 6 springs if necessary.
- 8 clutch plates [14] Minimum thickness 2.68 mm.
- The 7 smooth disks must be in good condition with a maximum deformation limit of 0.05 mm.

Refer to the 250 SE-R/300 SE-R spare parts catalogue for exploded views.

CONNECTING ROD ASSEMBLY

- Carefully push the connecting rod into the ball bearing from the top until it stops.

WARNING

The connecting rod must end up on the same side as the cylinder.

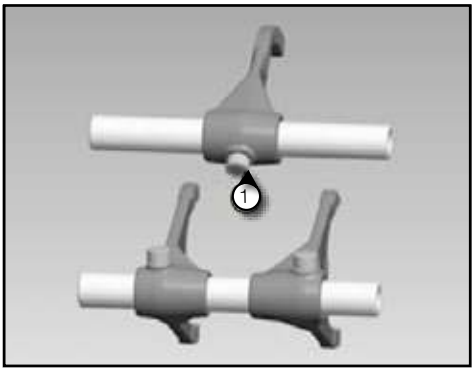

GEARBOX

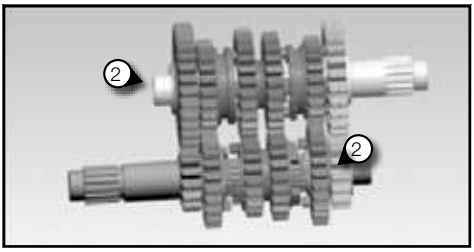

- Apply grease to the shift fork studs and thread the rings (1) over them.
- Fix the securing washers (2) on the primary and secondary shaft.
- Position both the primary and secondary shafts and push them into their respective bearings until they stop.
- Identify the direction and location of the forks on the photos. Fork (3) corresponds to the primary shaft.

WARNING

A used fork must have its original pinion and its rollers.

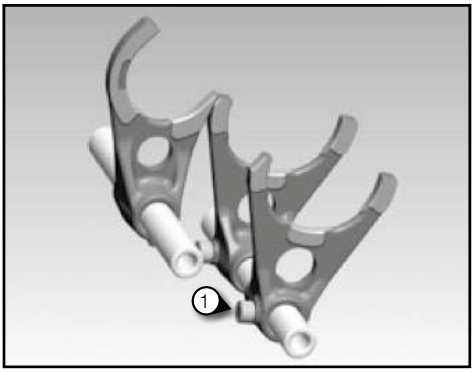

- Attach the forks in the grooves of the sliding gears and push the barrel into its ball bearing.
- Oil the fork shafts and thread them into the forks. Push the forks into their housing in the housing until they stop.

WARNING

When the forks are attached in the barrel, it is important to be careful that the rollers do not fall off the studs.

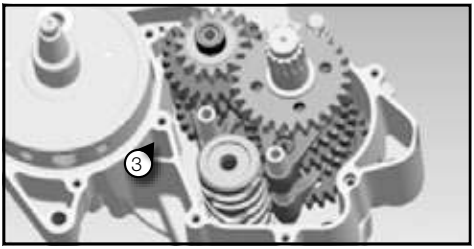

WARNING

The gearbox shafts must now turn without any hard points.

- Put the set ring on the primary shaft.

ASSEMBLING THE HALF CRANKCASES

- Assemble the gearbox lubrication tube on the right half crankcase.

WARNING

Pay attention to the tube indexing, flat section near oil cap rivet.

- Fit the o-ring onto the gearbox lubrication tube.
- Make sure that the centring rings are in place on the right half crankcase and that the gearbox shaft washers are also assembled.
- Lubricate the spi seals of the left half housing and put in position.
- Fix the screws and tighten to 10 Nm.
- Next, lightly tap the crankshaft with a plastic mallet and check that the shafts turn without any hard points.

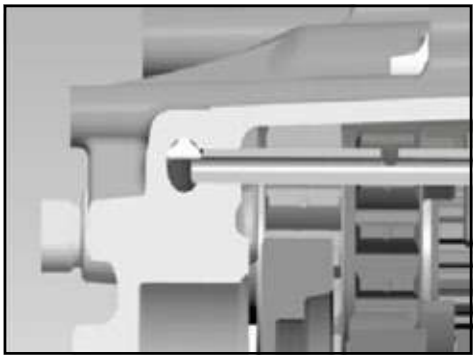

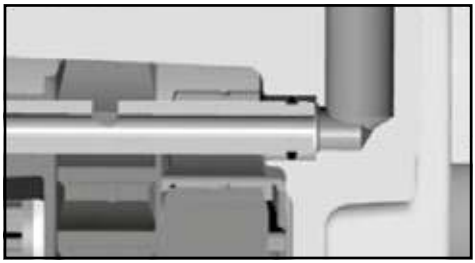

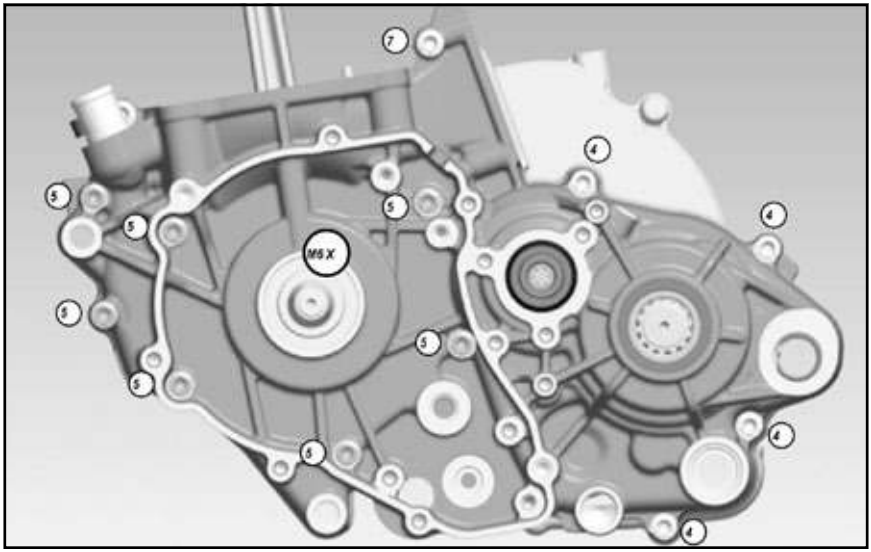

GEAR SELECTION MECHANISM

- Put the spring in the crankcase with the strand bent upwards.
- Thread the spacer, the locking pin.
- the washer, coat the CHC M6X20 screw with blue threadlock and assemble all parts.
- Attach the spring to the lever. The other end of the spring must be pressed against the housing.
- Fit the star selector's indexing pin onto the drum.
- Pull the lock lever back to position the star selector.
- Coat the screw with blue threadlock and assemble the star selector on the drum.

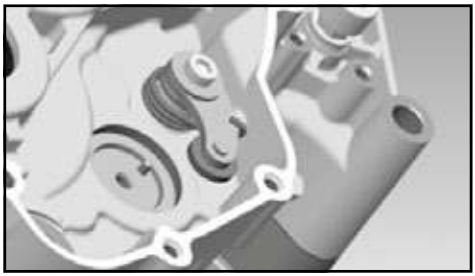

- Grease the already assembled selection pin and thread it into the needle bearings without forgetting the lock washer.
- When the prong stops against the star selector push it back so that the shaft can be lowered completely.

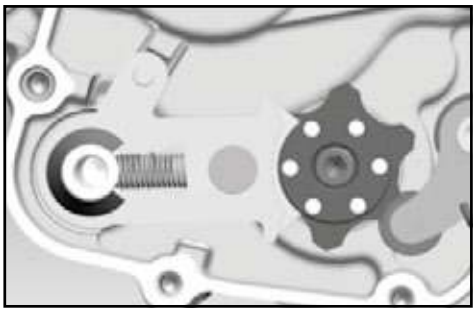

- Check that the return spring strands are against the pin on each side of the housing.
- Position the selector and try changing all the gears. You will have to turn the gearbox output shaft to change the different gears. Remove the selector again.

PRIMARY TRANSMISSION AND CLUTCH

- Grease the connecting rod assembly spi seal.
- Thread the previously oiled o-ring onto the connecting rod assembly, then fit the steel spacer with the groove on the same side as the balance weight.
- Install the half moon pin in its housing.
- Thread the pinion onto the rear of the crankshaft with the shoulder facing down.
- Thread the washer (1) and the two oiled needle cages (2) onto the primary shaft.

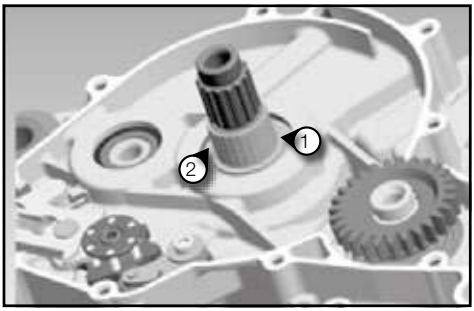

- Fit the clutch housing and its crenellated washer (3).
- Coat the threads of the primary shaft with blue threadlock.

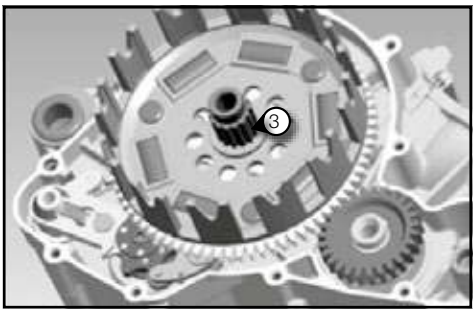

- Mount the clutch boss on the primary shaft, coat its nut with red threadlock and a new safety washer.
- Employ the 5749 tool and tighten the nut to 100Nm.
- Remove the tool and brake the nut by folding the edge of the lock washer.
- Put blue threadlock on the crankshaft thread.
- Assemble the conical washer and nut.
- Lock the primary gear with the 5206 tool and tighten the crankshaft pinion nut to 150 Nm using red threadlock.
- Remove the 5206 tool and check there are hard points in the primary transmission by rotating the connecting rod.

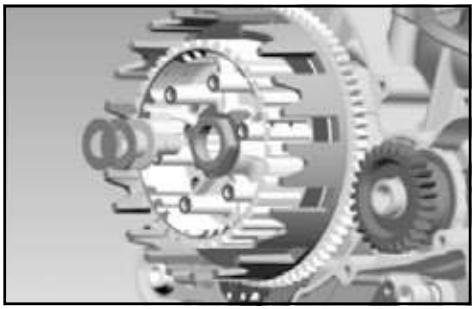

CLUTCH DISCS, PRESSURE PLATE

- Oil the push pin (1) and thread it onto the primary shaft.
- Before assembly oil the clutch plates.
- Start with one clutch plate. The 8 clutch disks and the 7 smooth disks are alternated.
- Place the pressure plate, springs, cups and CHC screws.
- Tighten the screws crosswise to 10Nm.

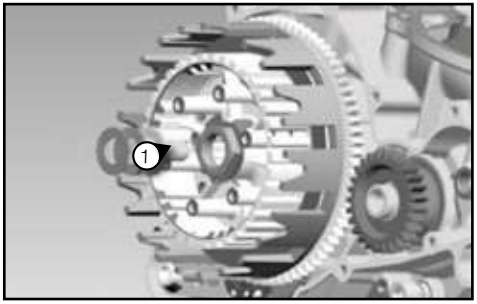

CLUTCH HOUSING

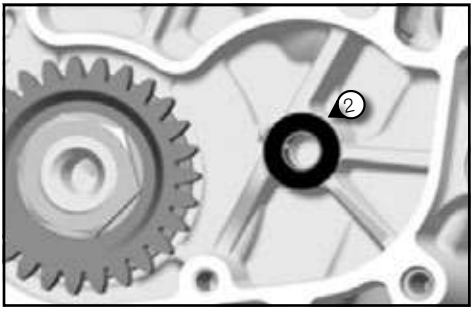

- Check that the two centring bushings are in place in the clutch housing.
- Fit the housing gasket and hold it in place with a little grease.
- Glue the water pump set ring (2) with a little grease.
- Position the clutch housing making sure that the water pump assembly is in place. The connecting rod assembly must be rotated so that the water pump pinion can engage the end of the crankshaft.
- Fix the THEP M6 screws and tighten to 10Nm except for the M6X12 to 6Nm.

WARNING

Put a new seal on the M6x50 screw, cooling liquid drain screw, and the M6x12 screw.

- Check that the shafts turn without any hard points.

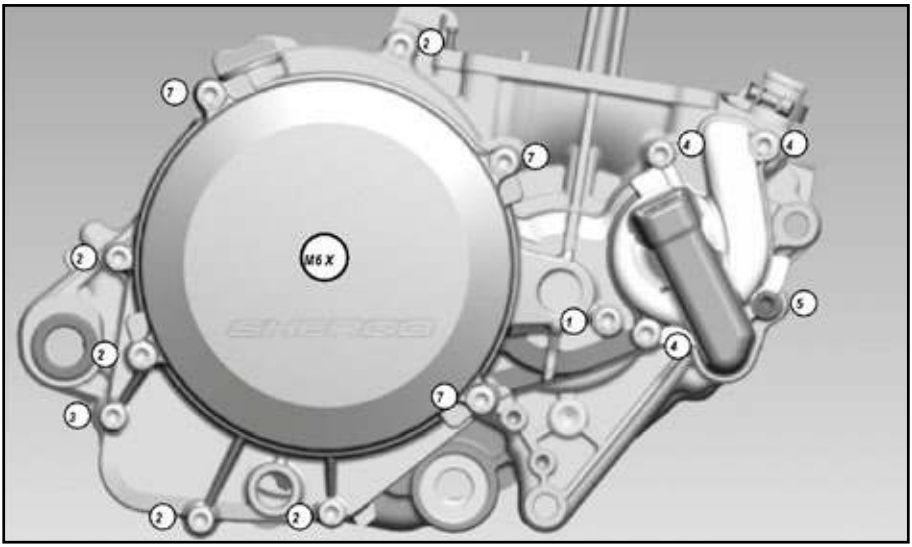

PISTON AND CYLINDER

- Oil the parts thoroughly before reassembling.
- Thread the needle bearing into the small end, position the piston (the arrow on the top of the piston in the direction of the exhaust).
- Position the shaft and the clips with the open side down.
- Place the 0.5 mm header gasket.
- Correctly position the segments, reference marks facing up.
- Install the cylinder.
- Tighten the flange nuts in 2 passes.
- The 1st to 20 Nm and the 2nd to 35 Nm.
- Check the squish by measuring the distance between the piston surface at top dead centre and the cylinder head surface

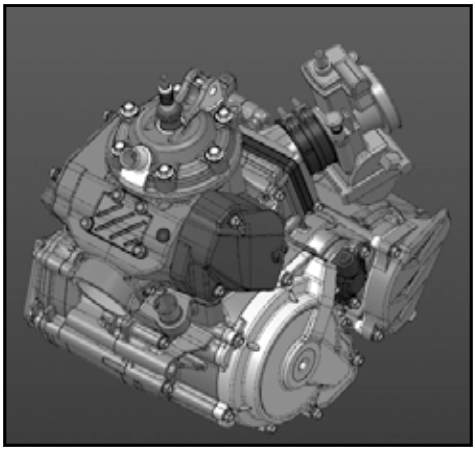

(WARNING firstly measure after having placed a 0.5 mm header gasket), depending on the value obtained from the following squish adjustment table, adjust with one or more header gaskets.

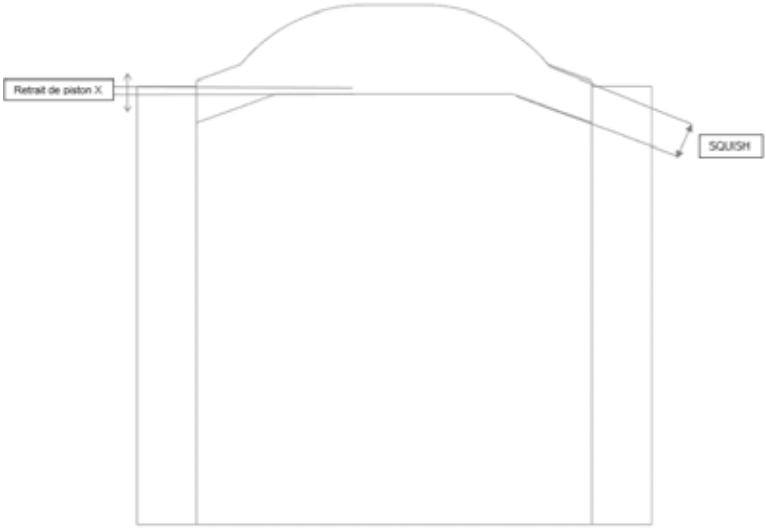

- 250-300 header gasket adjustment table.

Squish, Standard = 1.7±0.1 mm (Set back of piston = -0.05mm)			
Measurement of piston's overrun or set back (-) (X mm) Made with a 0.5 mm gasket	Squish 1st measurement 0.5 mm gasket	Thickness of gasket to put to have a 1.7 mm Squish	Sherco reference gasket(s) to be mounted for 1.7 mm Squish
X ≤ - 0,25	1,9 mm	0,3 mm	4942
-0,25 < X ≤ - 0,15	1,8 mm	0,4 mm	7238
-0,15 < X ≤ - 0,05	1,7 mm	0,5 mm	3840
-0,05 < X ≤ 0,05	1,6 mm	0,6 mm	4932 + 4932
0,05 < X ≤ 0,15	1,5 mm	0,7 mm	7238 + 4942
0,15 < X ≤ 0,2	1,45 mm	0,75 mm	4943

CYLINDER HEAD

- Clean the cylinder gasket and cylinder head surfaces.
- Put the 2 centring pins on the cylinder.
- Position the cylinder head.
- Fit the M8 shouldered screws with new copper washers.
- Tighten three times crosswise to 25Nm.

VALVE BOX AND INTAKE PIPE

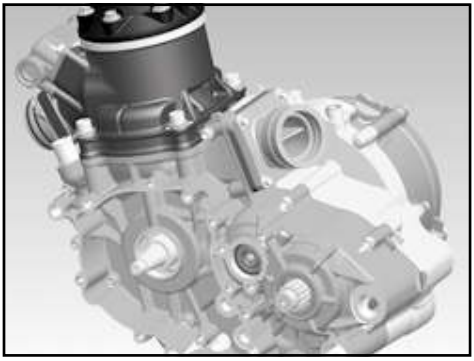

- Place a new valve box gasket.
- Put the complete valve box in the intake duct.
- Install a new intake pipe gasket.
- Assemble the intake pipe with the 4M6 screws.
- Install the intake sleeve with its metal collar.

GEARBOX OUTPUT PINION

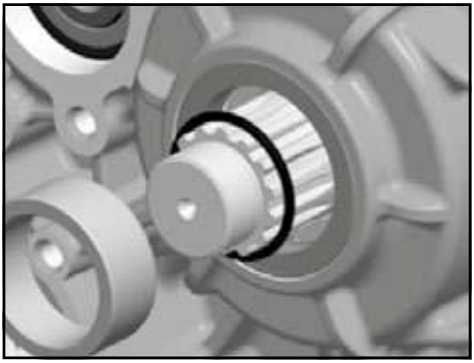

- Oil the o-ring and thread it onto the output shaft.
- Thread over the spacer so that the gasket sits in place.
- Place the gearbox output pinion, the safety washer.
- Put blue threadlock on the thread.
- Thread the safety washer.
- Fix the nut to tighten to 150Nm.
- Unfold the safety washer's tab onto the nut.

STARTER DRIVE ASSEMBLY

- Put the double pinion in the needle cage.
- Put the starter drive in place.
- Position the retaining triangle and fix the 3 THEP screws.
- Lubricate the pinions with grease spray.

MOUNTING THE IGNITION AND ITS COVER

- Put the half moon pinin its housing on the crankshaft.
- Thread the rotor onto the crankshaft.
- Put blue threadlock on the thread.
- Using the 5207 tool, put on the nut and tighten to 60Nm.
- Put the 2 centring sleevesin position.
- Fit a new gasket and secure the ignition cover.

MOUNTING THE ELECTRIC STARTER

- Replace the starter's o-ring with a new gasket.
- Lightly grease the o-ring.
- Install the starter into the right crankcase.
- Fix the starter with the 2 THEP screws.
- Finish by oiling and threading the clutch control rod into the primary shaft.
- Fit the speed selector with its screw and washer
- Fit the two drain plugs with a new seal.

WARNING

The gear box must be filled when the engine is back on its frame; if not, a certain amount of oil will escape out the primary shaft.

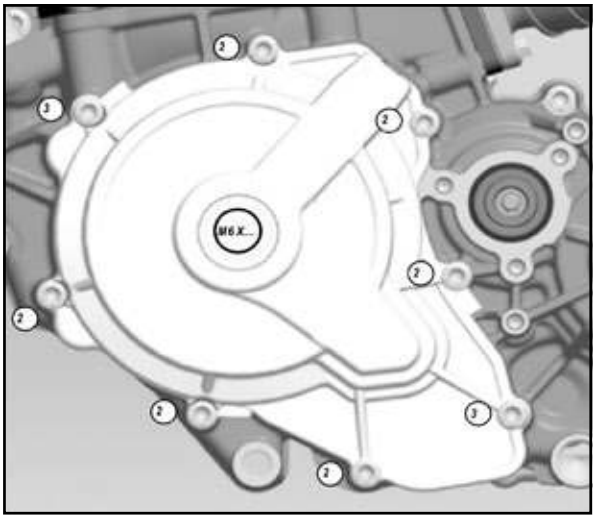

PRESENTATION OF THE IGNITION MANAGEMENT SYSTEM AND EXHAUST VALVE OPENING MANAGEMENT SYSTEM

- Your Sherco 250 SE-R and 300 SE-R is equipped with a Synerject electronic management system consisting of an M3C controller, an ignition, an engine actuator, a high voltage coil, a water temperature sensor and a specific electrical harness.

- Synerject M3C controller.

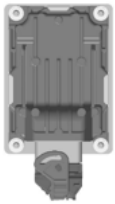

- Engine actuator.

- High voltage coil.

- Water temperature sensor.

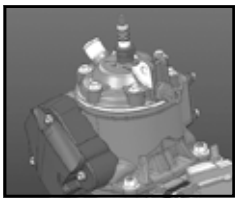

DESCRIPTION OF EXXODIAG DIAGNOSTIC TOOL REFERENCE 4967

- The diagnostic tool allows you to perform diagnostic operations, to make injection mapping updates and to be able to check certain information (serial number of the motorcycle, number of hours of operation, etc.).

COMPOSITION OF THE DIAGNOSTIC TOOL

- The case consists of a USB to MUX output cable, a MUX peripheral device, a MUX to motorcycle diagnostic connector cable, an installation CD (or the link below), a user manual.

http://download.annecyelectronique.com/Exxodiag/Sherco/ShercoDiag_Setup.exe

INSTALLING THE DIAGNOSTIC TOOL

WARNING

If you experience any problems during installation, please contact EXXOTEST at +33 (0) 4 50 02 34 34 or by mail at courrier@exxotest.com.

A - Installation of the software and drivers

- Open the installation CD with your computer or the file downloaded via the link.
- Run "Sherco_Setup".

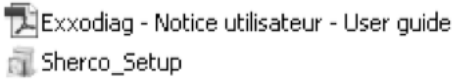

- Select the desired language.

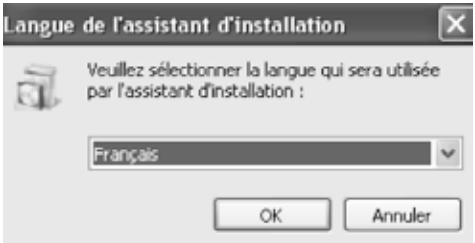

- Click "next".

- Select the folder where you want the software installed.

- Click "next".

- Click on "Install".

- Installation in progress.

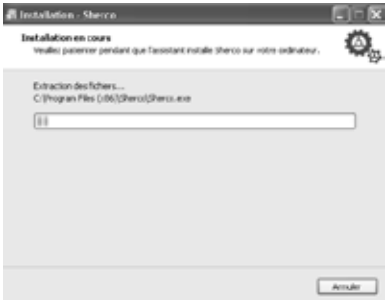

- Tick "Start installing drivers" and "Finish".

- The following window opens. Read the terms of the licence agreement. Tick "I accept the terms of the licence agreement" and "Install".

- Installation in progress.

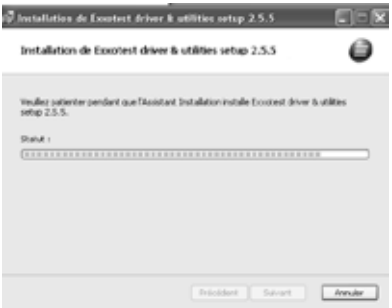

- The following window opens. Click "Finish".

- The installation is complete.

B - Connect the cable and its "MUXDIAG II" interface to a USB port on your computer

- Connect the cord to the motorcycle's diagnostic connector.
- Ensure that there are no problems with the feed to the "MUXDIAG II" box by checking the LEDs:

Blue fixed: connection with PC correctly established.

- Blue flashing: communication with PC in progress.
- Blue off: connection lost to the PC, peripheral device off or in standby, may also indicate a problem with the USB.
- Green fixed: problem with embedded software.
- Green flashing (slow): embedded software running correctly.
- Green flashing (fast): communication with PC in progress.
- Green off: no embedded software.
- Red fixed: card correctly powered.
- All LEDs off: the connector is not powered, has been deactivated or is in USB standby.

CONNECTION WITH KEYLESS SYSTEM

- Sherco has equipped its motorcycles with a keyless system that allows keyless use and which automatically cuts the motorcycle's ignition after 30 seconds of inactivity.
- This last feature can prevent the diagnosis operation, which is why it is important to respect the following steps before any operation.

1 - Disconnect the plug ① from the connector ②

(located on the rear frame hoop - right side of the motorcycle).

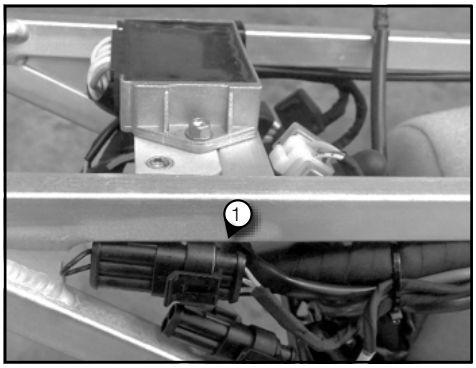

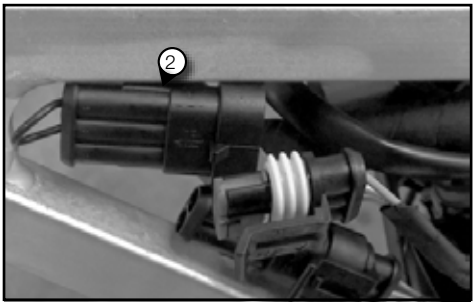

2 - Take the shunt ③ (part no. 6267) and connect the plug ① to it.

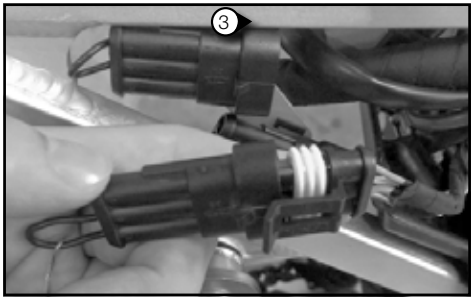

3 - You can now perform the diagnosis as explained below

Info : To establish the connection with the motorcycle, the motorcycle must be on.

To navigate through the various menus, only the "MUXDIAG II" box USB cable must be connected to the computer.

Start the software using the icon 

- You will access the following menu:

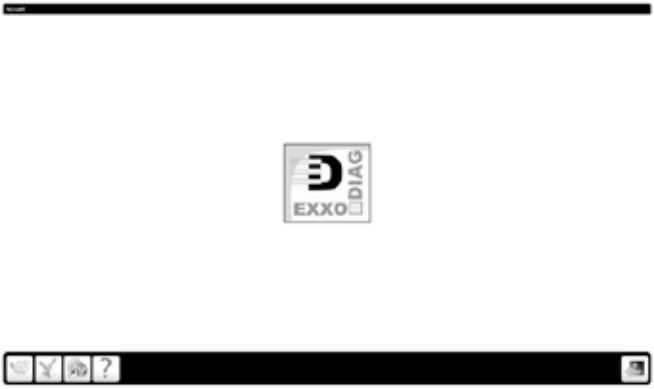

SOFTWARE SETUP: SETUP MENU

In this menu you can change:

- The diagnostic connector. You can refresh the list of connectors by clicking on the button . The number must match the "MUXDIAG II" unit number.
- The software user language: French, English, Spanish, Portuguese, German, Italian (it is possible that the installation CD does not include all languages. Update the software -> page 49).
- The choice of units.
- Click to return to the home screen.
- Click to confirm your changes.

UPDATE AND SYNCHRONISATION MENU

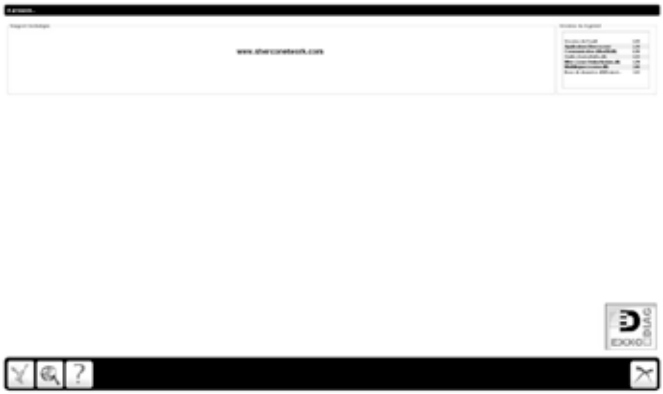

A - In this menu, you can update the diagnostic tool software

- To check if an update is available, ensure that you have an Internet connection and then click the following icon.
- If an update is available, the following window appears:

- If no update is available, the following message appears:

- Click ✓ to start downloading the update.

- The following message appears:
- Click ✓ to start the installation.

- Repeat the steps of the installation. You do not have to restart driver installation.

B - Configuring Internet access settings

You may need to set up a proxy server to access the Internet.

- Click on 

- Enter the following settings if necessary.

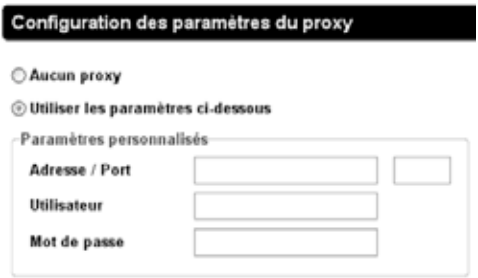

ENGLISH

USING THE SOFTWARE

Diagnostic menu and calibration update

General

- Click on "Sherco".

- Click on M3C - 2-stroke carburettor.

- You will access the following menu:

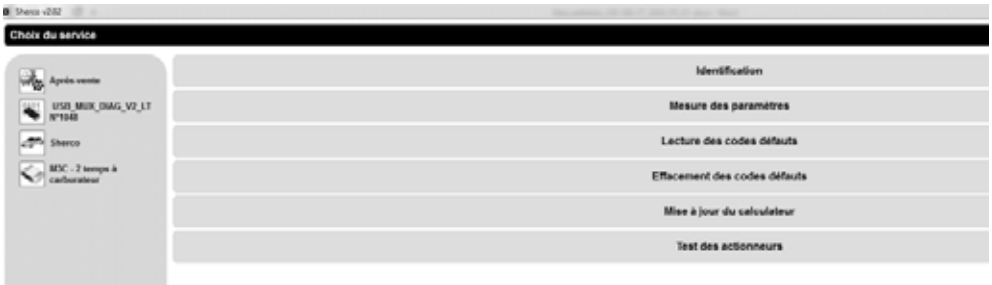

A - Identification: identification verification (serial number, vehicle operating hours, calibration number)

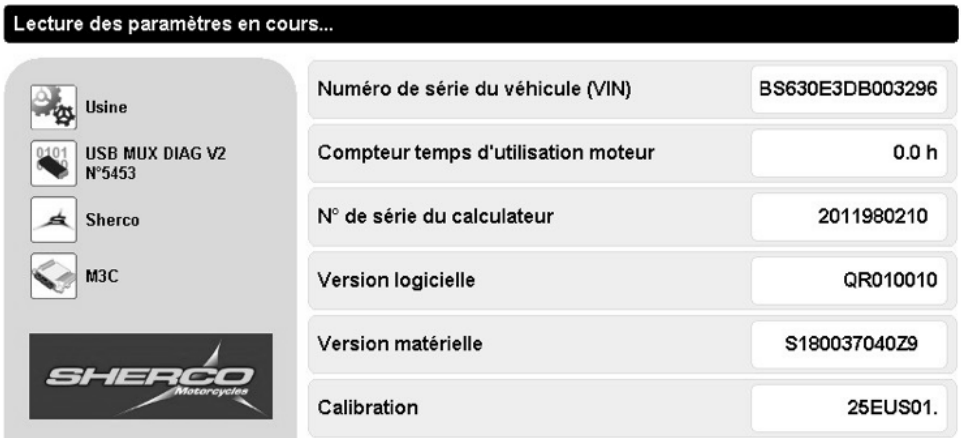

B - Settings measurement: general settings (speed, pressure, engine status, etc.)

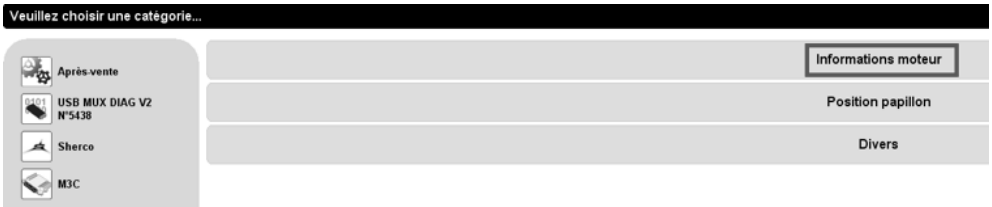

1 - Engine information:

The main system values appear:

Details:

- Stepper position: Not used.
- Throttle valve position: Not used.
- Stop button status: status of the emergency stop button. 0: deactivated, 1: activated.
- Engine status: ES (engine ready to start), ST (engine starts), IS (idle speed), PL (acceleration), PU (deceleration).

2 - Other less used values appear in the windows:

- Throttle valve position: Not used.
- Input pressure (mb): Not used.
- Engine synchronisation status: recognition of the motorcycle.
  0: engine unphased.
  1: running engine phased.
- Adaptive for all idle speed controller functions (%): function not enabled.

C - Reading fault codes

- When you click on "reading fault codes" the system starts the verifications.

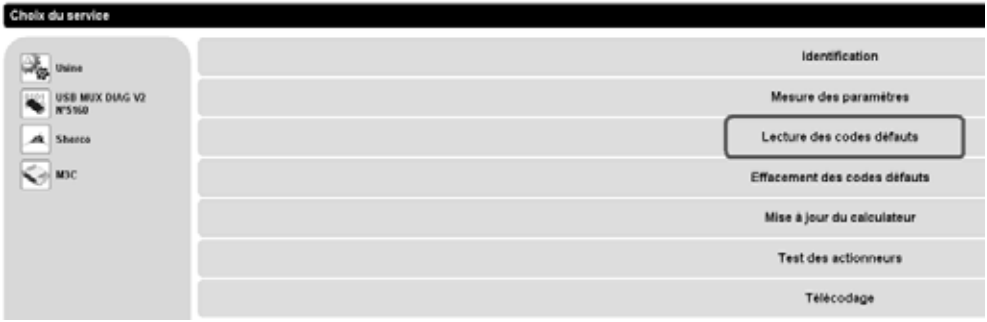

- If no fault appears, exit the menu with the icon 
- If faults appear:

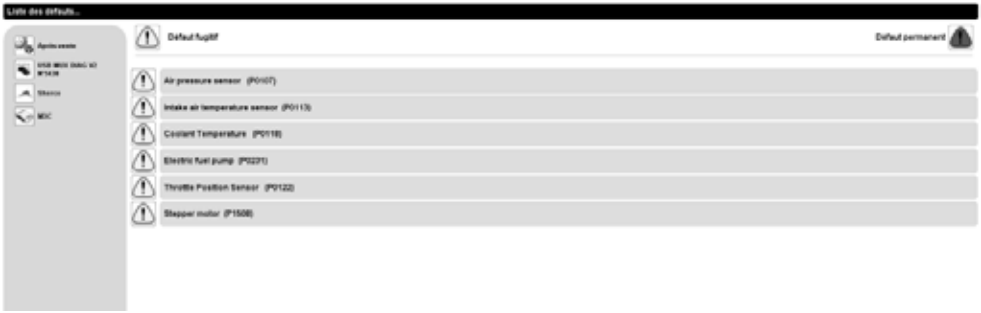

- By clicking on the displayed fault you can access its details :

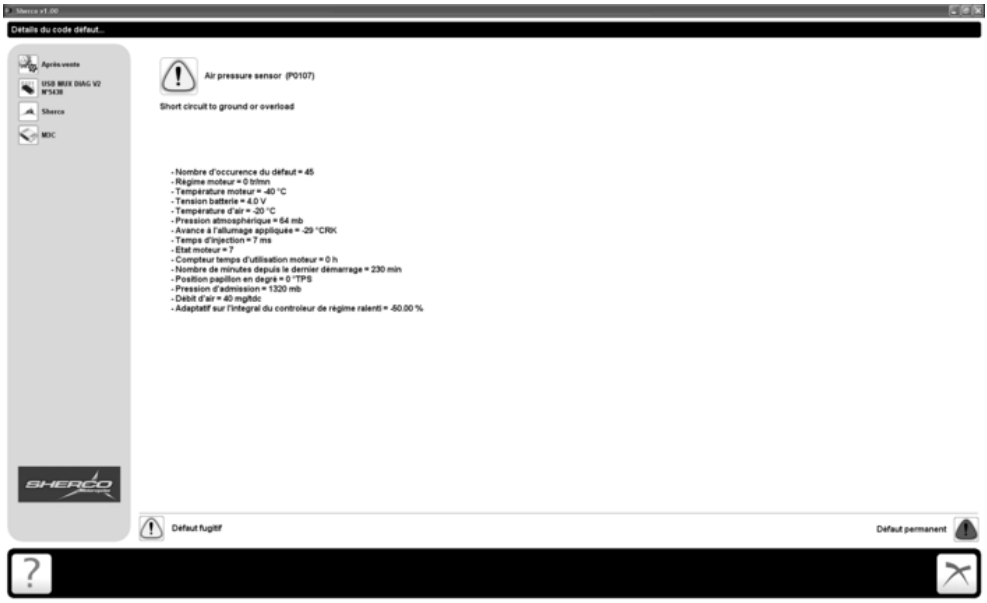

Note the faults and exit the menu with the icon ✓

Info :

1 - Transient fault/permanent fault : a transient fault becomes permanent after a variable number of engine cycles, depending on the components (injector, fuel pump, etc.). In order for a permanent fault to disappear, you must wait for 40 engine cycles without the fault appearing.

2 - Fan fault : if there is no cooling fan installed on the motorcycle, the fan fault (P0485) will always be displayed.

D - Deleting fault codes

1 - If faults appear, go to the menu "Delete fault codes"

- Confirm that the fault codes are deleted with the icon ✓
- The following tab appears :

- Confirm with the icon ✓

2 - Return to the "Reading fault codes" menu

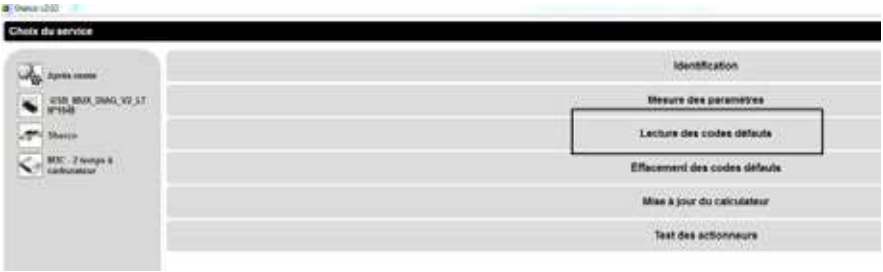

Check that the displayed faults are identical. Check/replace defective parts. Check the connections.

E - Updating the controller

It is possible to update the injection mapping (calibration) with the diagnostic tool. This could be for a Racing muffler, for example, or because an update is proposed by the factory.

These files will be freely available on sherconetwork (from the end of 2013).

Pay attention to the vintage, the engine capacity, the type of silencer, etc.

If in doubt, contact your technical support.

1 - Download the desired update (file.word)

2 - Switch on the motorcycle

3 - Click on controller update

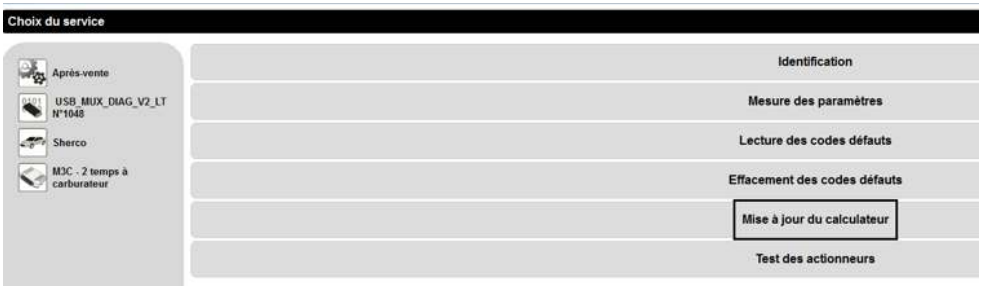

Confirm with the icon ✓

Select the previously downloaded calibration file (.word) and click on open.

4 - The file is being downloaded

WARNING!

Do not switch off the motorbike during the download operation (flash) do not suddenly turn off the software during the flash. The controller could be irremediably damaged.

5 - At the end of the download the fuel pump starts-up and the following message appears:

INFORMATION: the download was successful

Confirm with the icon 

6 - Check the correct assignment of the calibration file by selecting "Identification"

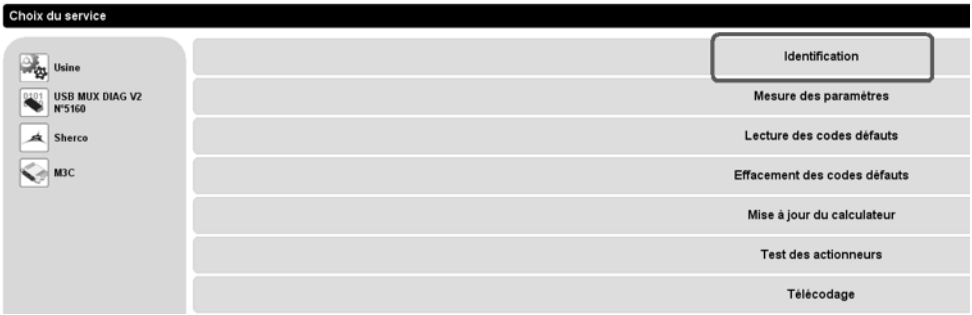

Check that the file name matches the downloaded file.

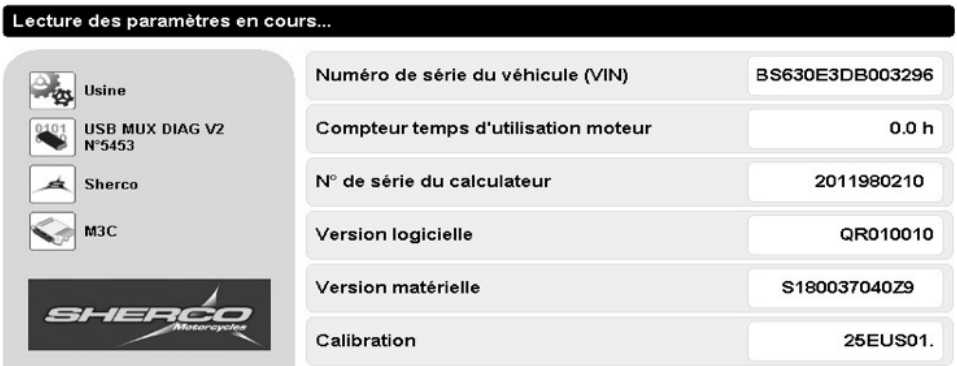

Info: the serial number and operating hours information are not reset during a calibration update.

7 - Start the bike and check that the engine parameters are normal (idle, stepper opening, etc.)

F - Actuator testing

In addition to reading fault codes, you can also test certain system components.

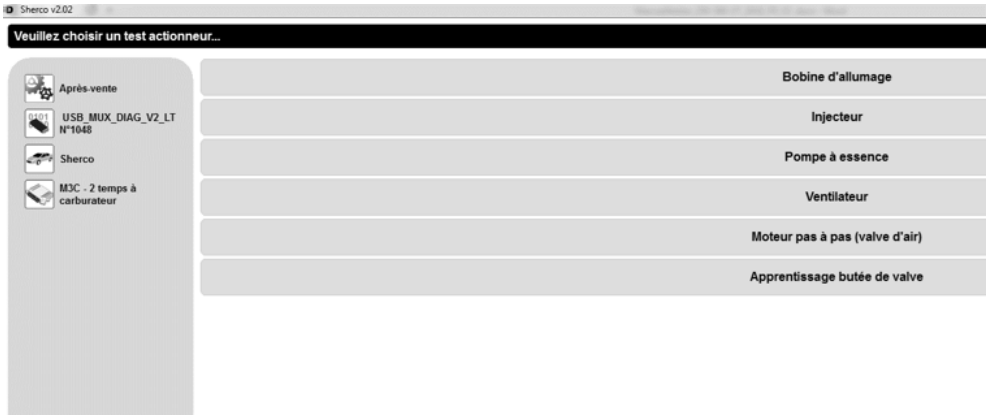

1 - Ignition coil

At the start of the ignition coil test, the following message appears :

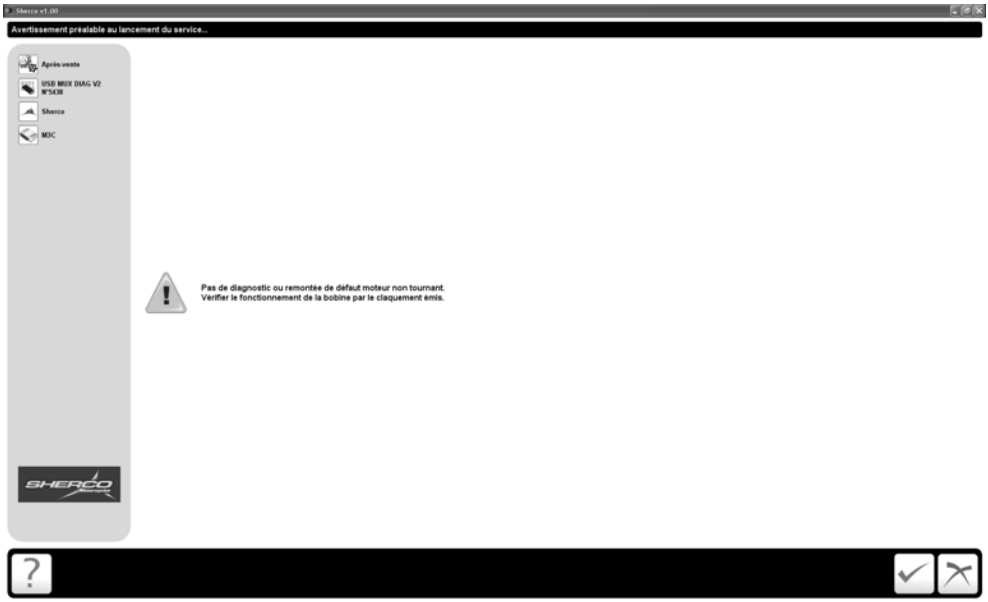

The system is not able to detect a coil fault when the engine is stopped. Whether the coil is defective or not, the test result will be identical. During the test, it is therefore important to check that the coil produces a sound that is characteristic of correct operation.

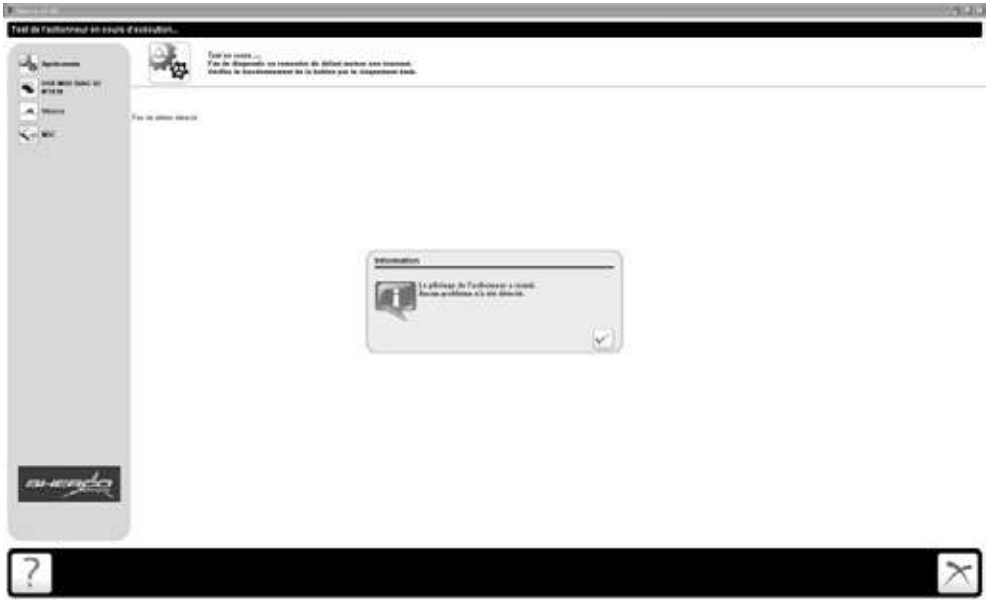

2 - Injector: not used

3 - Fuel pump: not used

4 - Fan
For the fuel pump, the fan and the stepper (air valve) the test is "standard", and the fault or normal operation information is relayed conventionally

5 - Engine step-by-step: not used

6 - Valve stop learning

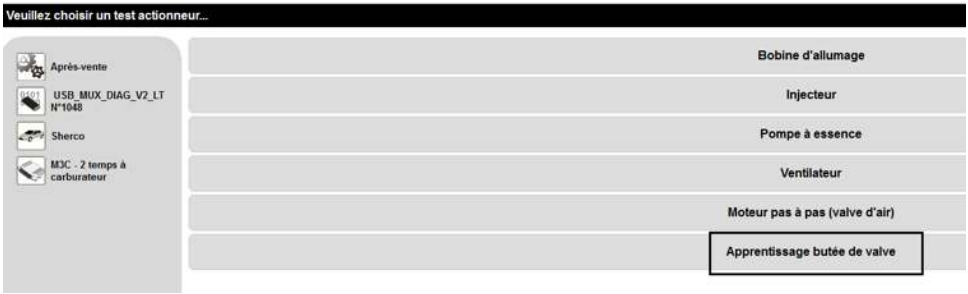

This learning sequence is mandatory after any maintenance work on the engine (Exhaust valve system cleaning and checking, replacement of cylinder parts, replacement of cylinder, disassembly or replacement of the electronic valve actuator…).

G - Screen printing function

When communicating with technical support and for the quick identification of potential problems, you can attach screen print files to your message using the F10 key of your keyboard.

The "identification" tab is very important for accurate communication (serial number of the motorcycle, engine hours, calibration, etc.).

TIGHTENING TORQUES TABLE

Standard tightening torque	Threadlock	
M5	7 Nm	
M6	10 Nm	
M8	25 Nm	
Chassis tightening torque	Threadlock	
Rear wheel nut	100 Nm	
Rear cradle fixing screw	24 Nm	•
Front wheel nut	40 Nm	
Fork end pinch screw	15 Nm	
Brake pad pin screw	8 Nm	•
Pinch screw for lower fork tees	WP 12 Nm Sachs 15 Nm	
Pinch screw for upper fork tees	WP 17 Nm Sachs 17 Nm	
Engine screw	60 Nm	
Swivel-arm screw	100 Nm	
Head-frame screw	24 Nm	
Engine torque	Threadlock	
RPM sensor screw	8 Nm	•
Coolant drain screw	10 Nm	
Oil level screw	6 Nm	
Clutch slave cylinder screw	9 Nm	
Cylinder head crosswise tightening torque	25 Nm	
Crankshaft handhold plug	8 Nm	
Clutch pressure screw	10 Nm	
Water pump housing screw	10 Nm	
Ignition flywheel nut	60 Nm	•
Clutch boss nut	100 Nm	•
Primary transmission pinion nut	150 Nm	•
Ignition housing screw	10 Nm	
Central crankcase screws	10 Nm	
Barrel screw	10 Nm	•
Starter triangle screw	10 Nm	
Starter screw	10 Nm	
Cylinder nut	Pass No. 1 20 Nm Pass No. 2 35 Nm	
Gearbox output pinion nut	150 Nm	•

SE-R 250 CARBURETTOR ADJUSTMENT TABLE

Sea level	Temperature	-20°C … -7°C	-6°C … 5°C	6°C … 15°C	16°C … 24°C	25°C … 36°C	37°C … 49°C
3.000 m to 2.301 m	Air screw adjustment	1T1/4	1T3/4	1T3/4	2T1/4	2T1/4	
	Idle jet	42	42	40	38	35	
	Needle	N1EG	N1EG	N1EH	N1EH	N1EI	
	Needle position	3	2	2	2	2	
	Main jet	165	162	160	160	158	
2 300 m to 1 501 m	Air screw adjustment	1T1/4	1T1/4	1T3/4	1T3/4	2T1/4	2T1/4
	Idle jet	45	42	42	40	38	35
	Needle	N1EG	N1EG	N1EG	N1EH	N1EH	N1EI
	Needle position	3	3	2	2	2	2
	Main jet	165	165	162	160	160	158
1 500 m to 751 m	Air screw adjustment	1T	1T1/4	1T1/4	1T3/4	1T3/4	2T1/4
	Idle jet	45	45	42	42	40	38
	Needle	N1EF	N1EG	N1EG	N1EG	N1EH	N1EH
	Needle position	3	3	3	2	2	2
	Main jet	168	165	165	162	160	158
750 m to 301 m	Air screw adjustment	1T	1T	1T1/4	1T1/4	1T3/4	1T3/4
	Idle jet	48	45	45	42	42	40
	Needle	N1EF	N1EF	N1EG	N1EG	N1EG	N1EH
	Needle position	4	3	3	3	2	2
	Main jet	170	168	165	165	162	160
300 m to 0 m	Air screw adjustment	1T	1T	1T	1T/4	1T1/4	1T3/4
	Idle jet	50	48	45	45	42	42
	Needle	N1EE	N1EF	N1EF	N1EG	N1EG	N1EG
	Needle position	4	4	3	3	3	2
	Main jet	172	170	168	165	165	162

SE-R 300 CARBURETTOR ADJUSTMENT TABLE

Sea level	Temperature	-20°C … -7°C	-6°C … 5°C	6°C … 15°C	16°C … 24°C	25°C … 36°C	37°C … 49°C
3.000 m to 2.301 m	Air screw adjustment	1T1/2	1T1/2	2T	2T	2T1/2	3T
	Idle jet	42	42	42	42	42	42
	Needle	N8RE	N8RE	N8RF	N8RF	N8RG	N8RH
	Needle position	3	2	2	1	1	1
	Main jet	172	172	170	168	165	165
2 300 m to 1 501 m	Air screw adjustment	1T	1T1/2	1T 1/2	2T	2T	2T1/2
	Idle jet	42	42	42	42	42	42
	Needle	N8RD	N8RE	N8RE	N8RF	N8RF	N8RG
	Needle position	3	3	3	2	1	1
	Main jet	175	172	172	170	168	165
1 500 m to 751 m	Air screw adjustment	1T	1T	1T1/2	1T 1/2	2T	2T
	Idle jet	45	42	42	42	42	42
	Needle	N8RC	N8RD	N8RE	N8RE	N8RF	N8RF
	Needle position	3	3	3	3	2	1
	Main jet	178	175	172	172	170	168
750 m to 301 m	Air screw adjustment	1T	1T	1T	1T1/2	1T 1/2	2T
	Idle jet	48	45	42	42	42	42
	Needle	N8RC	N8RC	N8RD	N8RE	N8RE	N8RF
	Needle position	4	3	3	3	3	2
	Main jet	180	178	175	172	172	170
300 m to 0 m	Air screw adjustment	1/2T	1T	1T	1T	1T1/2	1T 1/2
	Idle jet	48	45	45	42	42	42
	Needle	N8RB	N8RC	N8RC	N8RD	N8RE	N8RE
	Needle position	4	4	3	3	3	3
	Main jet	182	180	178	175	172	172

STATIC CONTROL VALUES (ENGINE OFF) 250 SE-R/300 SE-R

- Battery voltage > 12.5V.
- Resistance values of stator windings: Measurement of the resistance between each winding.

Y1-Y2	0.44Ω±20 % (at 20°C)
Y2-Y3	
Y1-Y3	

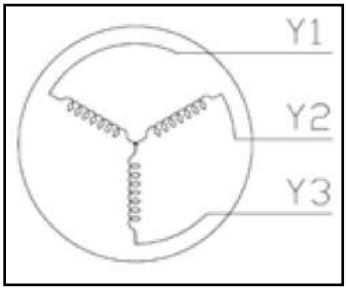

DYNAMIC CONTROL VALUES

- Voltage regulator:
  AC (calibrated 200V AC)
  When idling 22V ±2V
  At 6000 rpm min: 77V±3V
  DC
  On regulator output (Calibrated 20V DC)
  At 4000 rpm: 14.6V + Red/White, - Green
- Alternator:

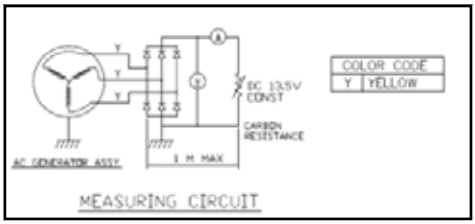

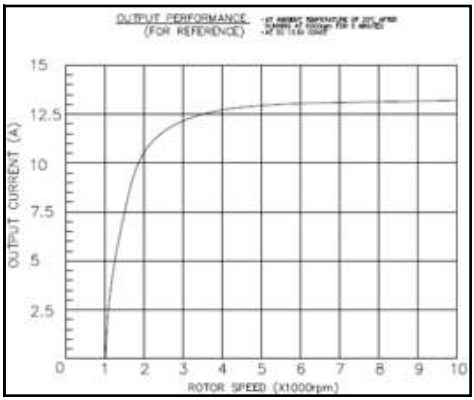

T° SENSOR, ENGINE RPM SENSOR, HV COIL CHECK

- Water temperature sensor resistance (on cylinder head).

TEMP (°C)	RESIST (K Ω)
-40	100.950
-30	53.100
-20	29.121
-10	16.599
0	9.750
+10	5.970
+20	3.747
+25	3.000
+30	2.547
+40	1.598
+50	1.150
+60	0.746
+70	0.565
+80	0.377
+90	0.275
+100	0.204
+110	0.153
+125	0.102

- Pick UP sensor resistance (RPM sensor): Red ~ Green 100 Ω±20 % (at 20°C).
- High voltage coil
  Primary coil 0.75 Ω±10 % (at 25 ± 2.5°C).

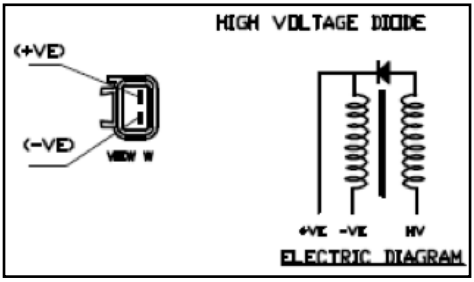

MAIN HARNESS

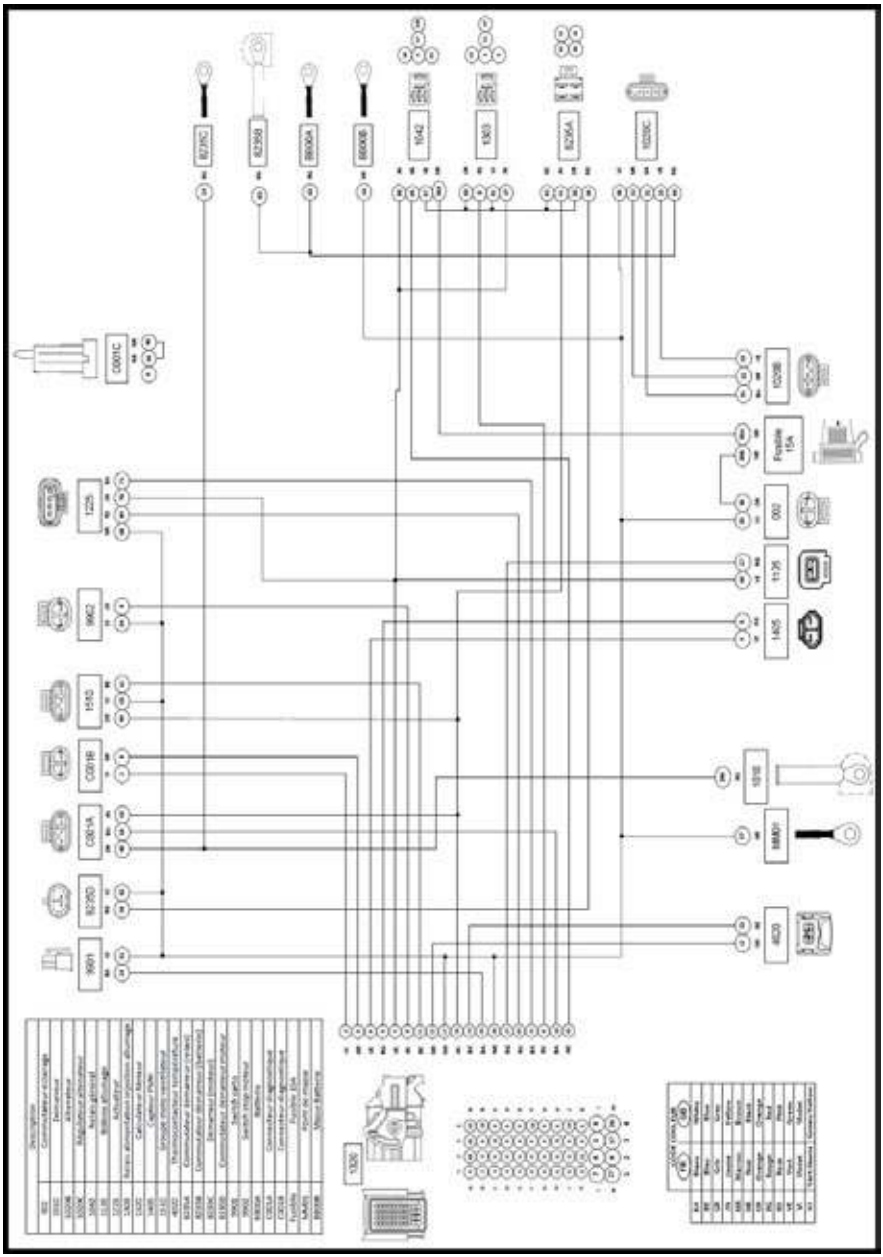

STANDARD LIGHTS HARNESS

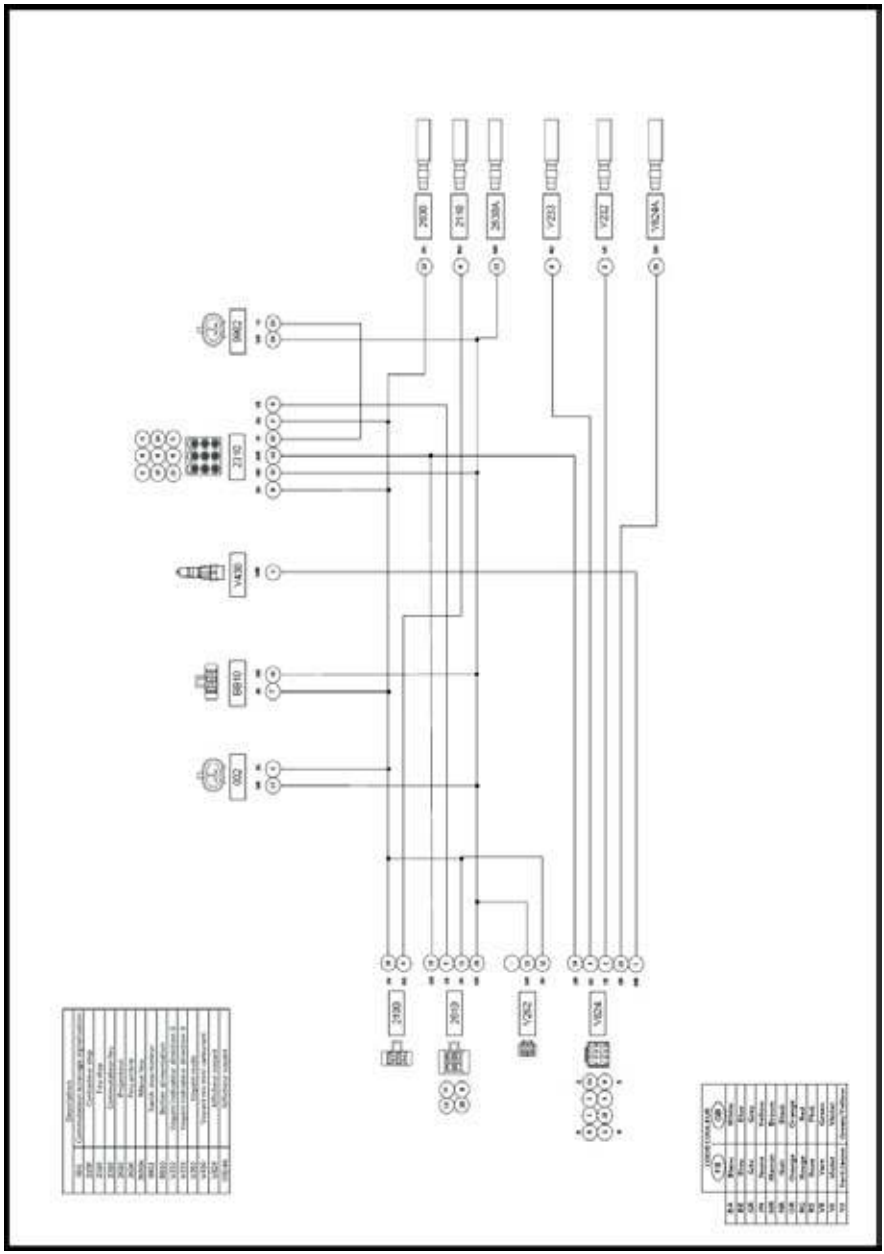

RACING LIGHTS HARNESS

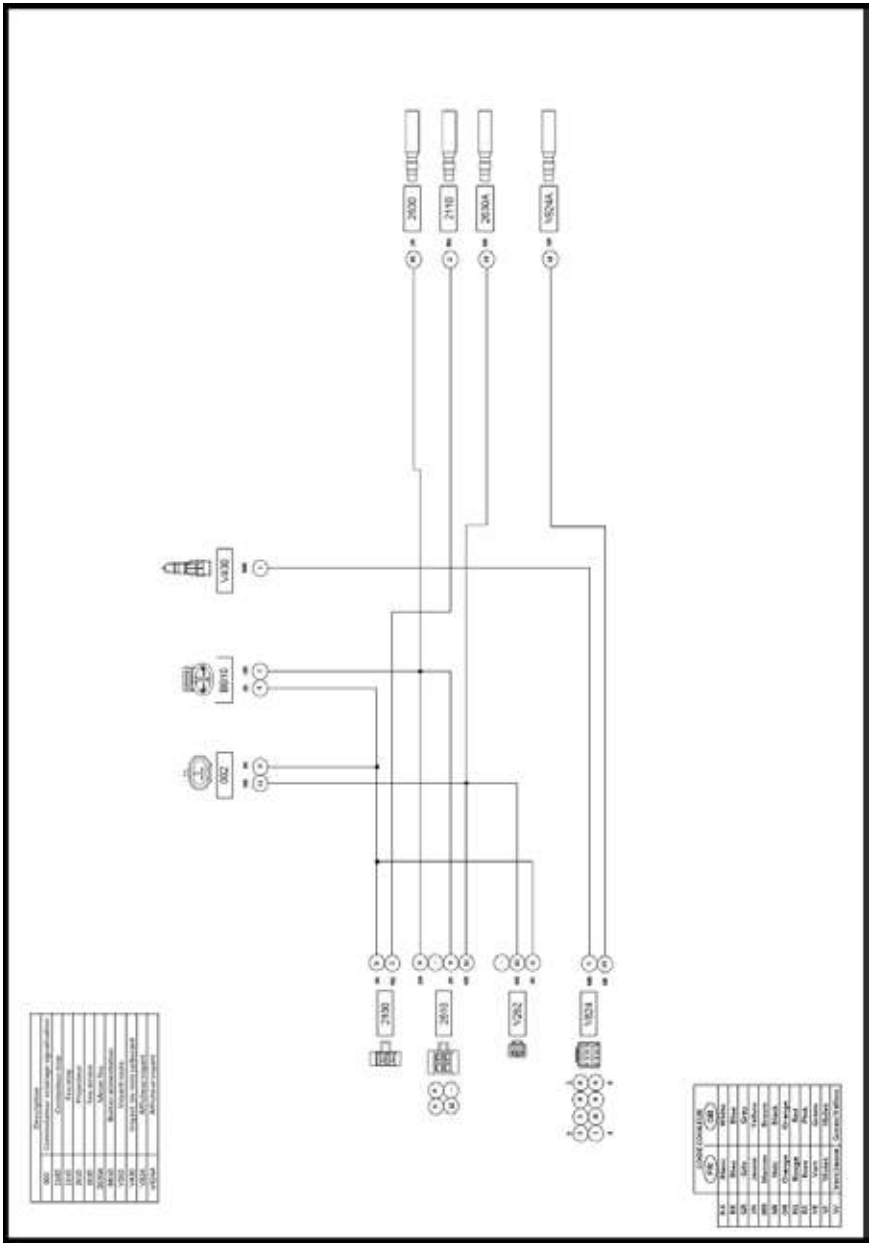

ACCESSORIES HARNESS

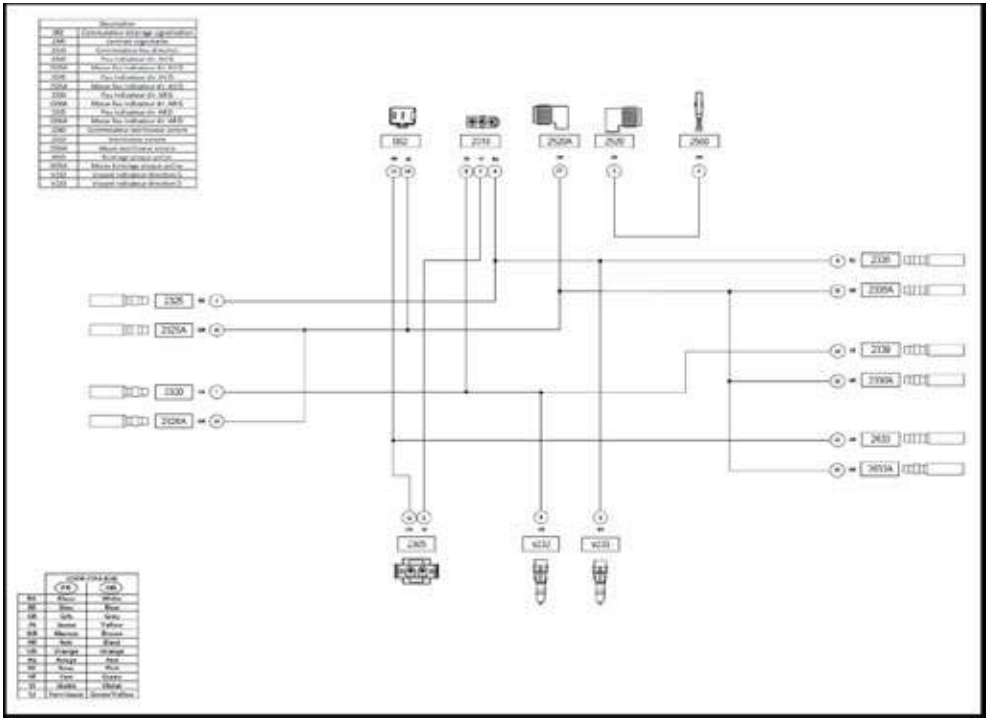

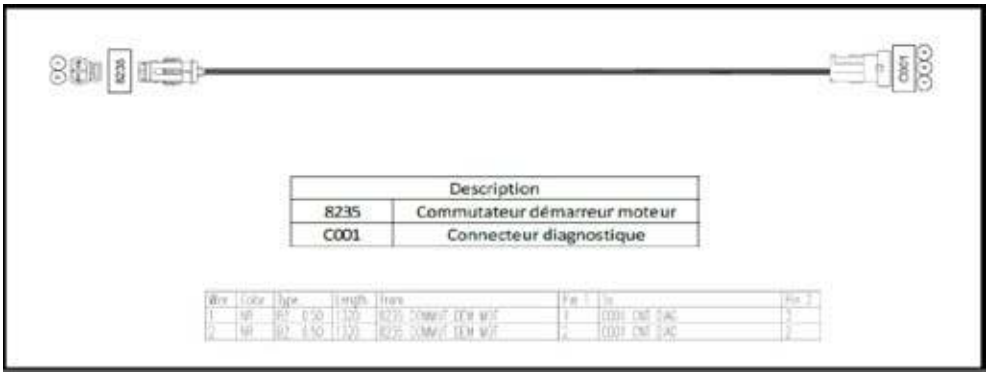

Description	
8235	Commutateur démarreur moteur
C001	Connecteur diagnostique

Wire	Color	Type	Length	From	Pin 1	To	Pin 2
1	NR	RT 0.50	1120	8235 CONNECT OEM W/F	1	C001 OBD DIAG	1
2	NR	RT 0.50	1120	8235 CONNECT OEM W/F	2	C001 OBD DIAG	2

SHERCO Motorcycles

www.sherco.com

MICHELIN GALFER GAERNE Twin Air SELLE DALLA VALLE ITALY

MINERVA OIL KENNY RACE TECH AFAM